HBC - SERIES V7

Low **V**oltage (63V), small types

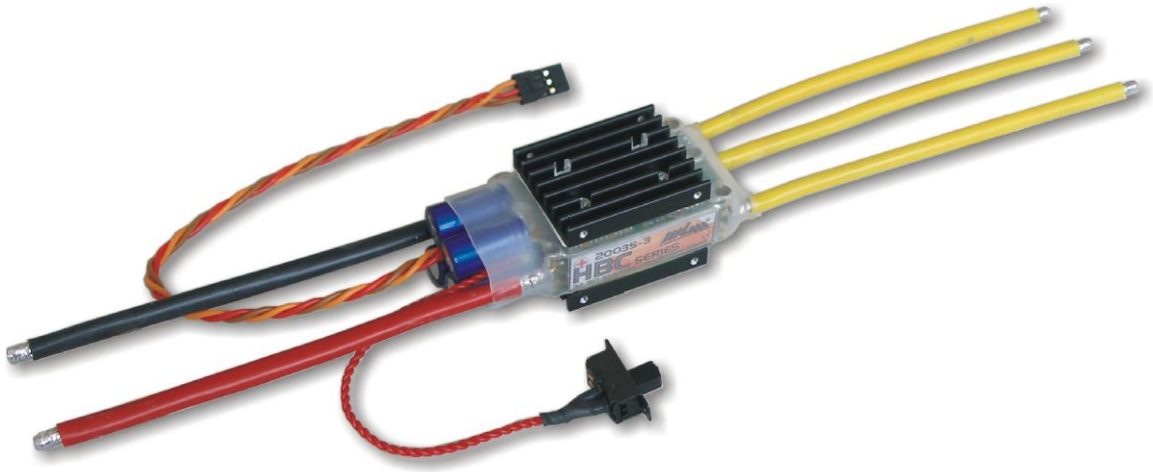

Programmable brushless controllers for industry using

Operating Manual – firmware version 3.8 or higher

Development, manufacture, service:
MGM COMPRO, Ing. G. Dvorský
Sv. Čecha 593, 760 01 Zlín, Czech Republic

Tel.: +420 577 001 350
E-mail: mgm@mgm-compro.cz
Info: www.mgm-compro.com

Small programmable brushless controllers for industry using TMM® xxxx – 3 HBC-series V7

These motor speed controllers provide very quality, smooth motor controls for electric cars, karts, bikes, scooters, boats, aircrafts, gliders, UAV, etc.. Great application is located in many industrial drives for pumps, winches, robots, production lines, ….

Controller uses the best available power MOSFET and synchronous PWM for achieve very high efficiency.
They feature very advanced (state-of-the-art) algorithms of moor control as well as safety of operation. Controller concept is based on a long experience with control of both sensorless and sensor BLDC (resp. PMSM) motors in very heavy and demanding operating conditions. For driving are used very powerful 32-bit ARM microcontrollers.
To enable our customers to exploit the newest developments and satisfy new requirements, SW update of the PC programs as well as the firmware update of the controller can be carried out by the customer himself/herself though the internet at any time. Thanks to this are easily accessible customer-specific modifications and adjustments FW

Basic Features:

- Working range of controllers **Low Voltage small types**: up to 63V, up to 210A continuous, power up to **6,3 kW**
- Small dimension and weight, many modification
- Controlled by powerful 32-bit processor ARM Cortex
- Very clear and easy parameters settings by PC with operating system Windows (XP, Vista, 7)
- Firmware update via internet
- Data transfer to PC (or other equipment) and **displaying in real time** (monitoring)
- Internal Data logging (BlackBox, record of voltage, rpm, currents, temperatures, …) record 12 minutes in length, with the external extension of up to several weeks
- Very clear indication of controller states and error codes using 4 LEDs 

- Synchronous rectification, very high efficiency **98** – **99%**
- Motor PWM in range **8 – 32 kHz**
- Suitable for inrunners as well as outrunners
- Very high rpm limit **250.000 rpm** for 2 poles motor (standard version)
- Suitable for motors without pole limiting
- Sensor motors as well as sensorless motors supported
- Automatic settings and optimization of sensor position
- Cruise Control function supported with external module CC1
- Support regenerative braking and battery charging under braking
- Support many working modes (**PWM, constant rpm, constant torque / car mode, boat mode, plain mode**)
- Very smooth step of throttle **2048 values**
- Possibility to connect brake lights or flashing beacon, indication and outputs
- Auxiliary **DC/DC converter** with output voltage 5V, 6V, 7V, 8V (setting by user), t continuous current up to **2A** (available only for 35V types)

- Electronic reversing
- Monitoring all phases and bus
- Configurable current limits forward / backward
- HW support of the voltage, current and temperature fuses
- Brake configurable in main control channel or in auxiliary control channel
- Controlling by PWM, voltage, potentiometer, data (RS-232 TTL), logic signal

- Support BMS (Battery Management System *MGM compro* for Lithium batteries)
- Support measuring (monitoring) of each battery cell
- Unmatched protection and management of Lithium batteries
- Conversion (recalculation) to internal battery voltage (independence of the processes of internal resistance and currents)
- Support any type of the battery (NiCd, NiMH, A123, Lipol, Li-Ion, LiFePo4, Pb, …) or power supply

- Support external display units (display current, rpm, voltage, temperature, energy (fuel meter), ….)
- Monitoring controller temperature, motor temperature, battery temperature
- Monitoring internal voltages and temperatures
- Electronics feeding from traction voltage
- Dropout of driving signal protection (cut-off potentiometer, etc.)
- Current multiplication: take less current from battery, output more current to motor
- Compact dimensions
- Cooling by airflow, by fan or by water
- Support of customer modification of firmware
- Support of customer configuration of HW

Table of content:

Note:

Content…….. all items are available quickly by ***CTRL+ left mouse button***.

blue underlined ….. all like this marking texts in manual quickly jump, by ***CTRL+ left mouse button,*** to corresponding content (cross reference).

In the Manual in „pdf“ format on these marking texts standard cursor changed to hand symbol ( ) . In this case only click to ***left mouse button,*** (without ***CTRL***), caused jump to corresponding content (cross reference).

(§NA) …….. parameters or features parking by this symbol are not available in this moment. As soon as will be available, you can download and update new firmware for your controller – please watch information on our web.

In this manual are described general things about this line controllers. Exceptions for each type of model are described in separate chapters or differences are highlights.
Separate chapters are devote to technical specifications and related things.

First steps

First, before you start run controller, we recommend read Basic Recommendations and make these steps:

- **solder (mounted) suitable connectors**
- **select basic of driving type** (car, boat, aircraft / PWM, constant rpm, constant torque).
  This you make by program „***Controller 2***“
- **connect controller to motor and other parts**
- **connect controller to driving (master) system,** see more Basic controller connection
- when you want use **sensor motor**, **read first instruction here**: Sensor motors and controllers

For first tests you can use controller with pre-defined average value of all parameters (type cells = **Automat 78%**) and Start with Automatic throttle limits. Of course, optimal behaviors of the controller and your system you achieve only by correct (optimize) settings and tuning corresponding parameters.

Parameter setting by program „***Controller 2***“ is very simple and intuitive and enable easy and transparent setting all controller features for optimal behavior. If you wish to enjoy all the possibilities of the controller, please refer to the whole manual.
When you set parameters, include throttle limits (= programed) or range of driving signal or driving voltage, you can start → Start with programed throttle limits.

Basic Recommendations

- **Shorten the cables between the battery and the controller as much as possible** (however not under 3 cm, there is a possibility of unsoldering wires from the controller) **! The higher the power and the "faster" the used motor, the more important is this requirement !**
- If you need to prolong the power conductors to batteries (distance between the controller and the batteries > 20 cm), it is necessary to solder additional capacitors (so more than capacitors used in the controller itself)!!! Additional capacitors must be the same as used in controllers, i.e. „**very low ESR**“, **105°C.** Also necessary used cables with correspond cross section !
- **Use only quality and well dimensioned connectors for connect battery to the controller !** Very suitable and very reliable connectors are MP JET 2.5 – 3.5 – 5.5 – 6.0 mm, which are dimensioned for currents up to 200 – 300A, see more to file, Be careful when choosing power connectors for batteries and motor! on our www. MP JET connectors feature small transition resistance, small dimensions and very firm connection (they do not come apart themselves as some other types do). We recommend to put the socket on the “**–** “ wire *(black wire)* of the controller and the plug on the “**+**” wire *(red wire)*. **Connectors of „plug" type 4mm, even golden-plated (4mm Gold Plated Bullet Connectors) or connectors of „Dean“ type are discouraged for use**.
- **!!! Warning, reversal of battery poles will reliably destroy the controller !** (The damage however, may not show immediately, but in some later runs) **!** Therefore, we recommend using the "**+**" pole plug and for the "**–**" pole socket, the possibility of reverse polarity will be significantly less than if you have to "**+**"and "**–**" pole of the same part of the connector (i.e. to be plug and plug)
- The leads to the motor *(yellow wires marked “**A**”, “**B**”, ”**C**”)* should be soldered directly to the motor or it is also possible to use the connectors mentioned above. If you decide to use connectors, this time solder sockets to the controller leads.
- Insulate the connectors after soldering, e.g. using heat shrinking sleeve.
- **Never connect more cells (higher voltage) than is specified in technical data, you can damage controller.**
- We always recommend, for more than 4 Lipol cells, first connect the traction battery via the auxiliary connector with a serial resistor, see more „Sparking prevent when connect higher voltage “
- **Short circuit of motor wires together (when batteries are connected) or short cut of these wires to the feeding voltage (“+” or “– “ cables) results in damage or destroy of the controller !**
- **Short circuit on the motor cables or feeding cables to any other wires** (control signal, communication link, …) **caused damaging of the controller !**
- **If the controller is powered by an AC adapter (mains power supply, not battery) should not even brake ! or off freewheel !!! Freewheel must be set “without synchro”. If you need to brake when powered by an AC adapter must be used the braking resistors with appropriate management** (control signal for braking resistors controlling provide controller yourself) **!!! If you braking and the controller is feeding from inverter, etc. without controlled braking resistors are very likely to destroy the controller !!!**
- **Do not underestimate the quality of traction batteries, has a significant influence on the system behavior.**
- **Do not SWITCH OFF controller or PLUG OFF BATTERY when motor RUN or when it is still turning – that may lead to damage or destroy of the controller !!! This also applies to spontaneous disconnecting of the connector during operation, e.g. by vibrations!!!** This is why connectors should be chosen very carefully – see recommendation above**.**
- **Be careful for using damaged motor or motor overloading, controller damaging is possible.**
- One controller can control only one motor.
- **It is necessary to cool the controller in operation with flowing air (or water for water coolers). Do not obstruct the access of cooling airflow to the controller, e.g. by packing the controller in foam.**
- It is recommended to measure current drawn from battery with charged battery and full load (protection of the battery and controller).
- **Only clamp Ampere meters using are permitted** (always for DC current, measure on the battery cables).
  Never use Ampere meter inserted to the circuit (i.e. between battery and controller) **– you can damage controller !**
- **It is convenient to use measurements carried out by the controller during the drive and their display using PC.** Please remember, that even one additional cog on pinion of the motor significantly increase the drawn currents. With acceleration set faster, currents in the start-up peak rise very fast, and that up to many times of the current in the steady state. It is necessary to do the measurement with the hardest batteries, which you wish to use in the set. This will prevent possible problems with overloading the controller, motor and batteries.
- Controllers designed for sensor motors can work also with sensorless motors – depend only on the correct parameter settings (motor type).

Technical data (valid for 25°C environment temperature)

(valid for control board EF5)

Temperature of the environment: 0°C to 40°C
Number of regulation steps: 2048 / full throttle range
Motor controlling: PWM: from 8 up to 32 kHz
Max. rpm for 2 poles motor: 250 000 rpm

Suitable for motors: (sensors + sensorless) **without limits number of poles,** motors of classical conception (rotor inside) and also for outrunners (rotor is on the outer side), FreeAir, Hacker, Kontronik, Lehner, LRK, Mega, Model Motors, MP JET, MVVS, Neu, PJS, Plettenberg, etc.

Control signal: Positive pulses 1.5 ± 0,8 ms, period 2.5 up to 30 ms / voltage 0 – 3.3V (5.0V) / logic signal / data transfer

DC/DC converter (BEC): **5V, 6V, 7V, 8V / 2A cont, 6A max.** (10 sec.), input voltage = 6 up to 35V by type (OPTO versions haven't BEC !)

Feeding: **from batteries**: NiCd, NiMH, Li-Ion, Li-Pol, A123, acid (Pb) or others cells
from power supplies: in this case is not permit braking without braking resistors ! or switch-of freewheel !
Also is necessary set parameter **P21** to „**freewheel, no synchro**".

Cables #1 - #5: with JR gold connectors, 20 cm long, 0.25mm^2

Weight is defined for basic modification, i.e. **internal cooling plate, shrinking tube, WP, OPTO, input PWM driving** (servocable #1), **without switch**. In case of use additional parts as external hetasinks, fans, … weight increase :

dimension HT (ribbed heatsink) :	+3,5 mm	+7,5 gram	(single heatsink = 37,5 ×31×5 mm / 11 gram), take off internal cooling plate
dimension HTW (1× water cooler) :	+9 mm	+16,5 gram	(single heatsink = 37,5 ×31×6 mm / 15 gram, pipes Ø 4 / Ø 3, length13 mm)
dimension HTW (2× water cooler) :	+6 mm	+15 gram	
dimension F (fan) :	+10 mm	+10 gram	(30 × 30 × 10 mm / include screws / 10 gram)
switch (with wire) :		+ 2 gram	
cable #2 - #5 (each one) :		+ 3,2 gram	
DC/DC converter (BEC):		+ 3 gram	

Note: by shortening of power cables to motor and battery (power supply) weight decrease proportionally.

HBC-series TMM® xxxxx-3 V 7.xx	4526-3	6026-3	9026-3	12026-3	21026-3
Maximal continuous power:	1,17 kW	1,56 kW	2,34 kW	3,12 kW	5,46 kW
Basic dimensions see picture **[mm]**					
Dimension CL (Filtering capacitors) **[mm]:**	Ø 8 × 17	Ø 8 × 17	Ø 10 × 17	Ø 10 × 17	Ø 10 × 17
Dimension CT (Controller thickness) **[mm]:**	13	14	17	19	25
Dimension D (M2 threads distance) **[mm] +):**	--	--	22	24	30
Weight without power cables:	34 g	36 g	48 g	56 g	82 g
Weight with power cables:	47 g	49 g	77 g	91 g	125 g
Feeding voltage:	6 – 26 V	6 – 26 V	6 – 26 V	6 – 26 V	6 – 26 V
No. of feeding cells NiCd / NiMH:	6 – 18	6 – 18	6 – 18	6 – 18	6 – 18
No. of feeding cells Li-Ion / Li-Pol:	2 – 6	2 – 6	2 – 6	2 – 6	2 – 6
No. of feeding cells A123:	3 – 7	3 – 7	3 – 7	3 – 7	3 – 7
Max. continuous current *):	**45 A**	**60 A**	**90 A**	**120 A**	**210 A**
Max. short time current : **)	60 A	80 A	120 A	160 A	280 A
On-state FET resistance at 25 °C:	2×0,8 mΩ	2×0,7 mΩ	2×0,4 mΩ	2×0,35 mΩ	2×0,18 mΩ
Possible modification with DC/DC conv.:	yes	yes	yes	yes	yes
Cables cross section to batt. ■■ / motor ■■■*):**	2,5/2,5 mm^2	2,5/2,5 mm^2	4/4 mm^2	6/4 mm^2	6/4 mm^2

HBC-series TMM® xxxxx-3 V 7.xx	5035-3	10035-3	18035-3	4545-3	9045-3	5063-3	10063-3
Maximal continuous power:	1,75 kW	3,50 kW	6,30 kW	2,025 kW	4,05 kW	3,15 KW	6,30 kW
Basic dimensions see picture **[mm]**							
Dimension CL (Filtering capacitors) **[mm]:**	Ø 8 × 17	Ø 10 × 17	Ø 10 × 17	Ø 10 × 31	Ø 10 × 31	Ø 8 × 31	Ø 10 × 31
Dimension CT (Controller thickness) **[mm]:**	14	19	25	19	25	13	17
Dimension D (M2 threads distance) **[mm] +):**	--	24	30	24	30	--	22
Weight without power cables:	36 g	56 g	77 g	51 g	76 g	37 g	63 g
Weight with power cables:	49 g	91 g	120 g	65 g	105 g	51 g	98 g
Feeding voltage:	6 – 35 V	6 – 35 V	6 – 35 V	9 – 45 V	9 – 45 V	9 – 63 V	9 – 63 V
No. of feeding cells NiCd / NiMH:	6 – 24	6 – 24	6 – 24	9 – 32	9 – 32	9 – 44	9 – 44
No. of feeding cells Li-Ion / Li-Pol:	2 – 8	2 – 8	2 – 8	3 – 10	3 – 10	3 – 15	3 – 15
No. of feeding cells A123:	3 – 9	3 – 9	3 – 9	4 – 12	4 – 12	4 – 17	4 – 17
Max. continuous current *):	**50 A**	**100 A**	**180 A**	**45 A**	**90 A**	**50 A**	**100 A**
Max. short time current : **)	70 A	140 A	250 A	62 A	125 A	70 A	140 A
On-state FET resistance at 25 °C:	2×1,1 mΩ	2×0,55 mΩ	2×0,28 mΩ	2×1,0 mΩ	2×0,50 mΩ	2×0,65 mΩ	2×0,33 mΩ
Possible modification with DC/DC conv.:	yes	yes	yes	no	no	no	no
Cables cross section to batt. ■■ / motor ■■■*):**	2,5/2,5 mm^2	6/4 mm^2	6/4 mm^2	2,5/2,5 mm^2	4/4 mm^2	2,5/2,5 mm^2	6/4 mm^2

The appearance and the technical data may be changed without prior notice.

+) Notice: available for controllers with two heatsinks
*****) Notice:** possibly also 2×2.5 mm^2 or 2×4.0 mm^2 respectively 2×6,0 mm^2 upon request

Recommendations: If you use controller for currents higher than circa half of the maximal values, we do recommend intensive cooling by air flow or use of heat sinks (possibly also active cooling using fans or water cooling). This will not only prevent possible overheating of the controller, but you will also gain higher efficiency of the drive unit (cooler controller has lower losses than warm one).

***) Maximal continuous (nominal) current:**

Maximal continuous current, without any time limits, is defined as current with full switching (100% motor PWM) with environment temperature 25°C and with corresponding cooling (air flow, fan or water cooling).
Another important criterion is the phase currents in the full switch. Requested are practically identical (as relates to the current value) as the current from the battery. If the phase current is significantly higher than the current from the battery (engine overloaded, poorly designed engine, etc.), the maximum continuous current be proportionally lower.

****) Maximal short time current:**

Controller tolerates for a short period increased current The time during which the regulator can deliver this current depends on the intensity of cooling. Adjustable current limit (parameter P19) is calculated from this current.

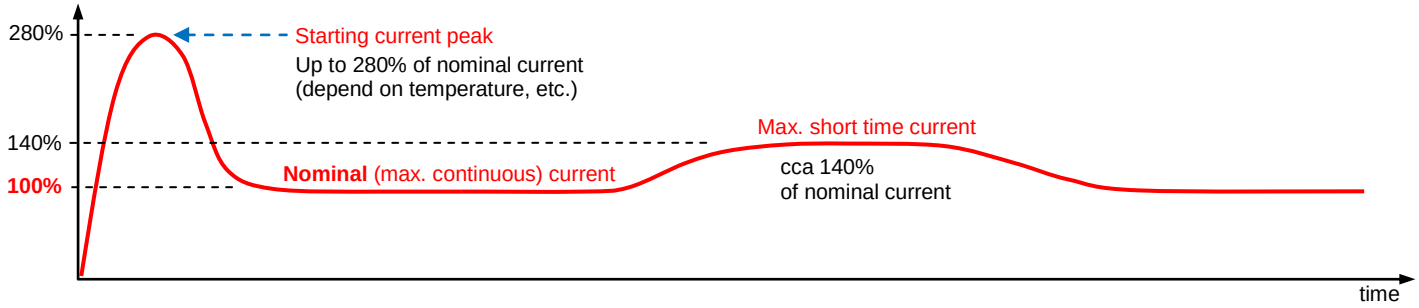

Recommendations: In case the controller is use with currents higher than ca 50% of the maximal values, we recommend intensive cooling by air flow or use active cooling using fans or water cooling. This will not only prevent possible overheating of the controller, but you will also gain higher efficiency of the drive unit (colder controller has lower losses than warm one).

Accessories and options, available combination of HBC controllers

Controllers have in basic version only basic equipment. Features and options can significantly affect by the controller additional equipment specifications.

Equipment of the controllers in the basic version:

- potentiometer input control (voltage control, 0 up to +3.3V), without switch, internal cooling plate, shring tube, without DC/DC conv.
- ICS-2 connector for setting parameters, reading data from the controller, monitoring, update firmware, connection of external modules
- soldered power cables, length 9/12 cm, cross section see table

Accessories and options:

For concrete hardware specification (or a custom firmware) and for order a specific configuration of the controllers, please use the "HSBC_ordering_form.xls". Not all combinations are available simultaneously. For questions or inquiries, please contact directly the *MGM compro*.

Controller type you can specify in the order according to your specific requirements.

Switch:	all controllers may be ordered with a switch (in a safe design - its damage or destroy does not affect the safety of flight and the model / motor don´t stop working when switch component damaged
Heat sinks (coolers):	For more efficient power loss (heat) dissipation, it is possible to optionally mount (from one or both sides depending on the type of the controller) **outer ribbed heat sinks** (coolers).
Fans:	In case of insufficient cooling air flow it is possible to use heat sinks with fans **FAN 05**, which significantly improve the cooling efficiency – **active cooling**. **Possible order as set FAN 05 separately, with screws, for additional mounting to heat sinks – using of another type is strictly prohibited !!!**
Water cooling:	version with water coolers is available for use in boats or in systems with higher demands for cooling intensity.
Hydro version WP:	water and humidity does not get on well with electronics. For significant increase of durability of the controller against humidity and water, it is optionally possible to apply specialty protective cover (marked as **WP**). This however does not mean that the controller with this protection is 100% durable during humidity and water and that it is not necessary to protect it against these negative effects. **The protection does not apply to salt water at all !**
Hydro version WR:	If you need high protection against water, moisture and dust, you can use controllers with **WR** modification. It is a thick layer of special material on the PCB, more expensive solutions. **The protection does not apply to salt water at all!**
Sensor motors (SE):	all types of controllers may be ordered suitable for sensor motors. These controllers may be connected to sensorless motors as well as sensor motors. In this version is automatically available to the motor temperature measurement.
Battery temperature (BT):	controllers have add measuring of battery temperature
Each cell monitoring:	all controllers have the option to measure each battery cell with an additional module BMM-16.
Control of braking resistors:	All types can be ordered with a connector and power management circuits for braking resistor switch**.**
Communication:	All types can be ordered with a communication interface RS 232 TTL (Rx/Tx).
Telemetry (BC):	All types can be ordered with options to connect Tx / Rx modules for telemetry (per channel RS-232 TTL)**.**
Type of controls:	All types can be ordered with a control by voltage, PWM, potentiometer, data, logic and signal combinations. You can also order two control channels (e.g. for a separate function brake / throttle)**.**
The long data record:	if necessary, the record can be extended with external module LBB_RT with micro SD card on the length of the order of weeks. The module is also available in a version with real time. §NA
Cruise Control connection:	for all types is available external module CCM1, with which the cruise control function is provided.
External display connecting:	for all types are available an external display module can be connected either via the Rx / Tx port (RS 232 TTL).
External modules connecting:	for all types of controllers can be connected external modules to a connector ICS-2
Customer changes:	if you need non-standard features or behavior of the controller, it is possible to agree on a customer change - please contact the ***MGM COMPRO***.

Available versions of HBC-series TMM xxxxx-3 V7 and basic dimension

(specification in chapter „Technical data “)

Basic dimensions.
Dimensions CL, CT, HT1, HT2, D, F
are in the table (Technical data)

Regular controller without coolers, controlling by voltage (potentiometer), with switch
4526-3, 6026-3, 5035-3, 5063-3

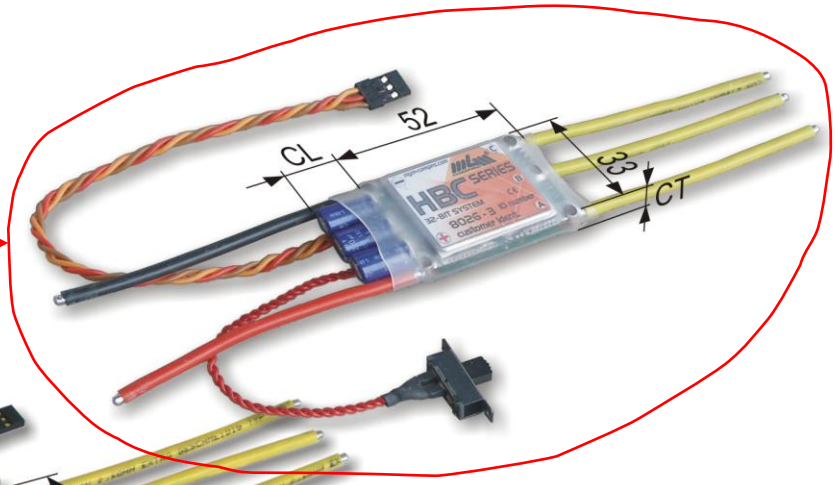

Version with heat sinks for controllers
4526-3, 6026-3, 5035-3, 5063-3

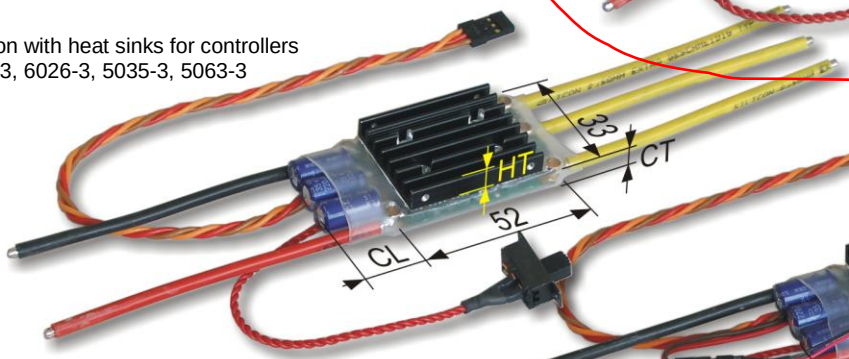

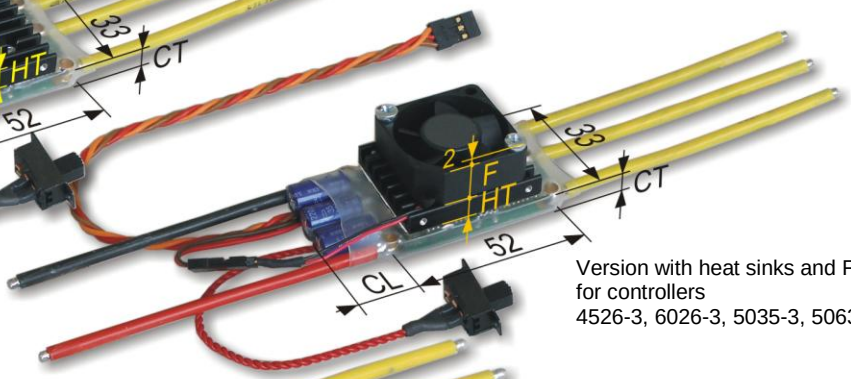

Version with heat sinks and FAN for controllers
4526-3, 6026-3, 5035-3, 5063-3

Version with 2 heat sinks for controllers for higher powers

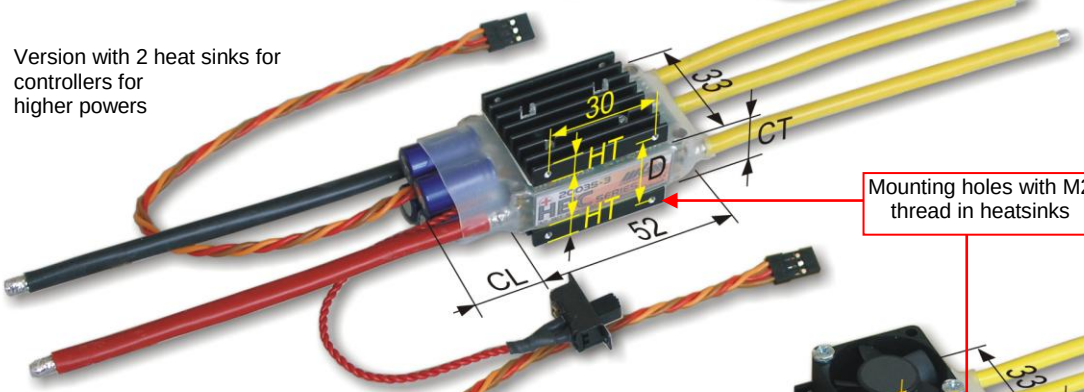

Mounting holes with M2 thread in heatsinks

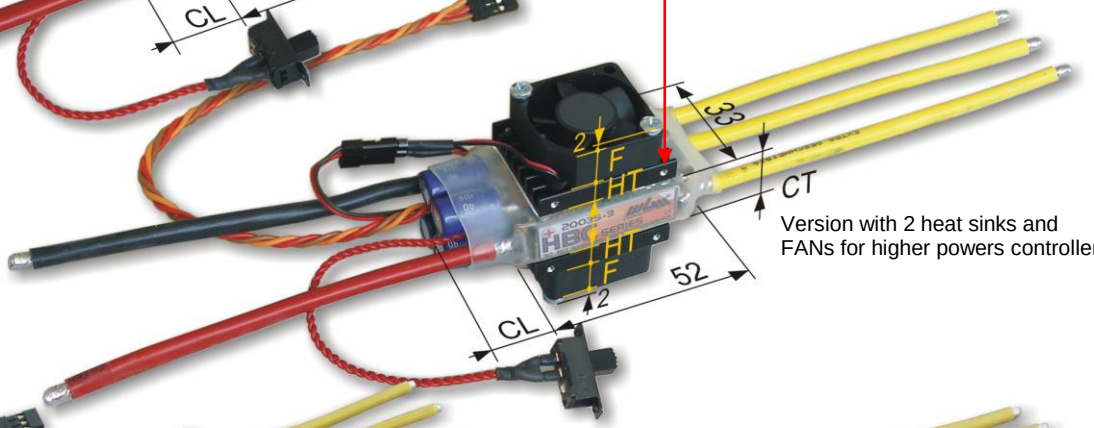

Version with 2 heat sinks and FANs for higher powers controllers

Version with water cooling for controllers 4526-3, 6026-3, 5035-3, 5063-3

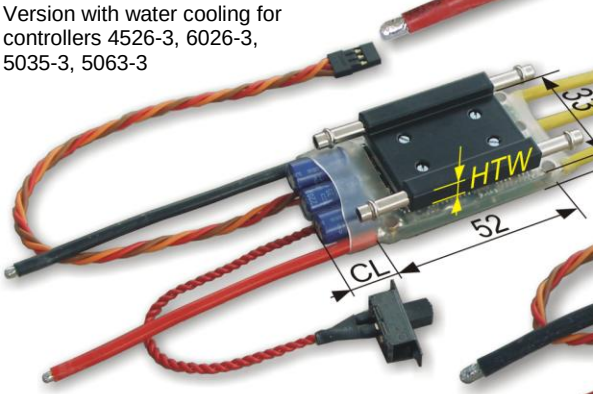

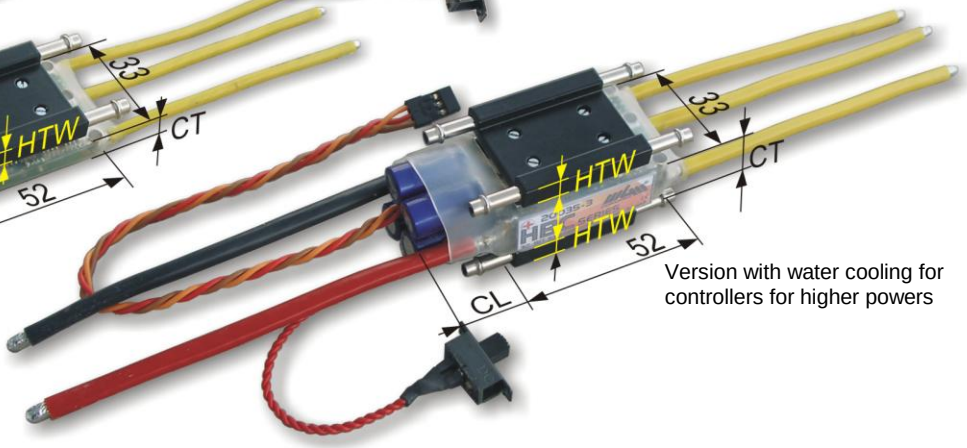

Version with water cooling for controllers for higher powers

Version with cooler (heatsink) for controllers
4526-3, 6026-3, 5035-3, 5063-3
WR version

Version with 2 coolers (heatsinks) and fans for
controllers 9026-3, 12026-3, 21026-3, 10035-3,
18035-3, 4545-3, 9045-3, 10063-3
WR version

Basic description of the controllers

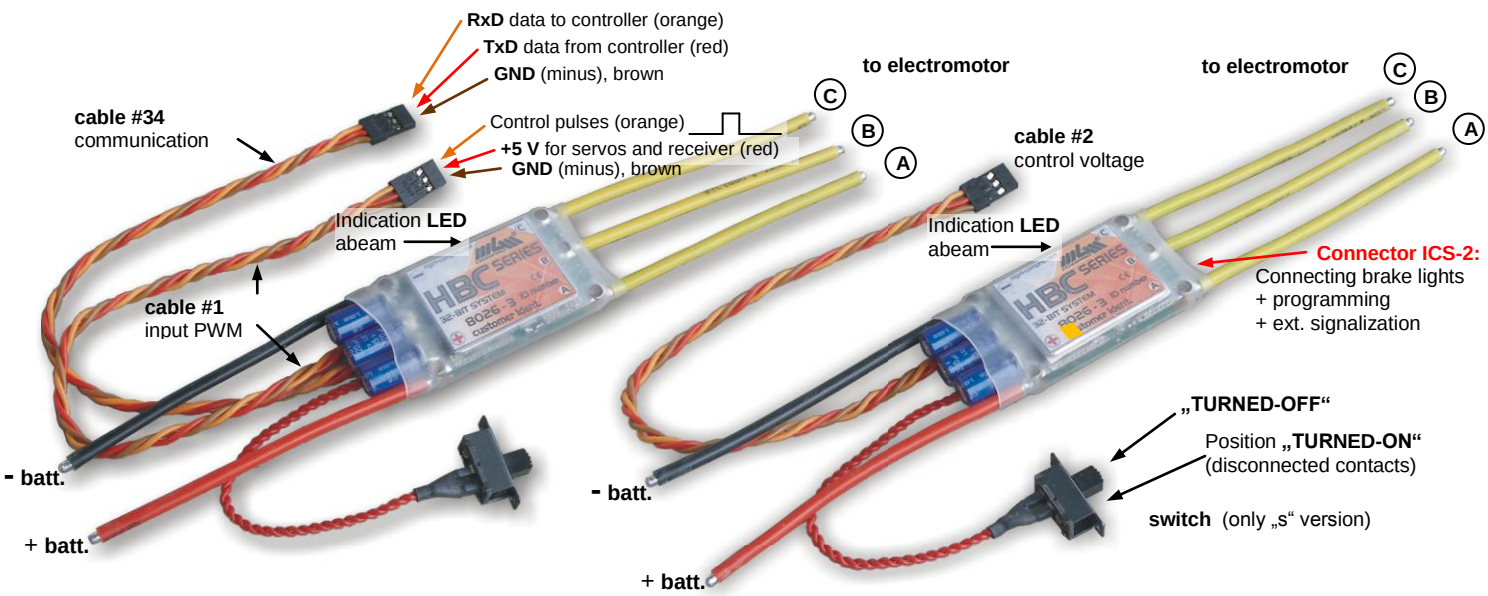

Controller version with communication and with switch

Basic modification with switch

Summary of possible inputs / outputs

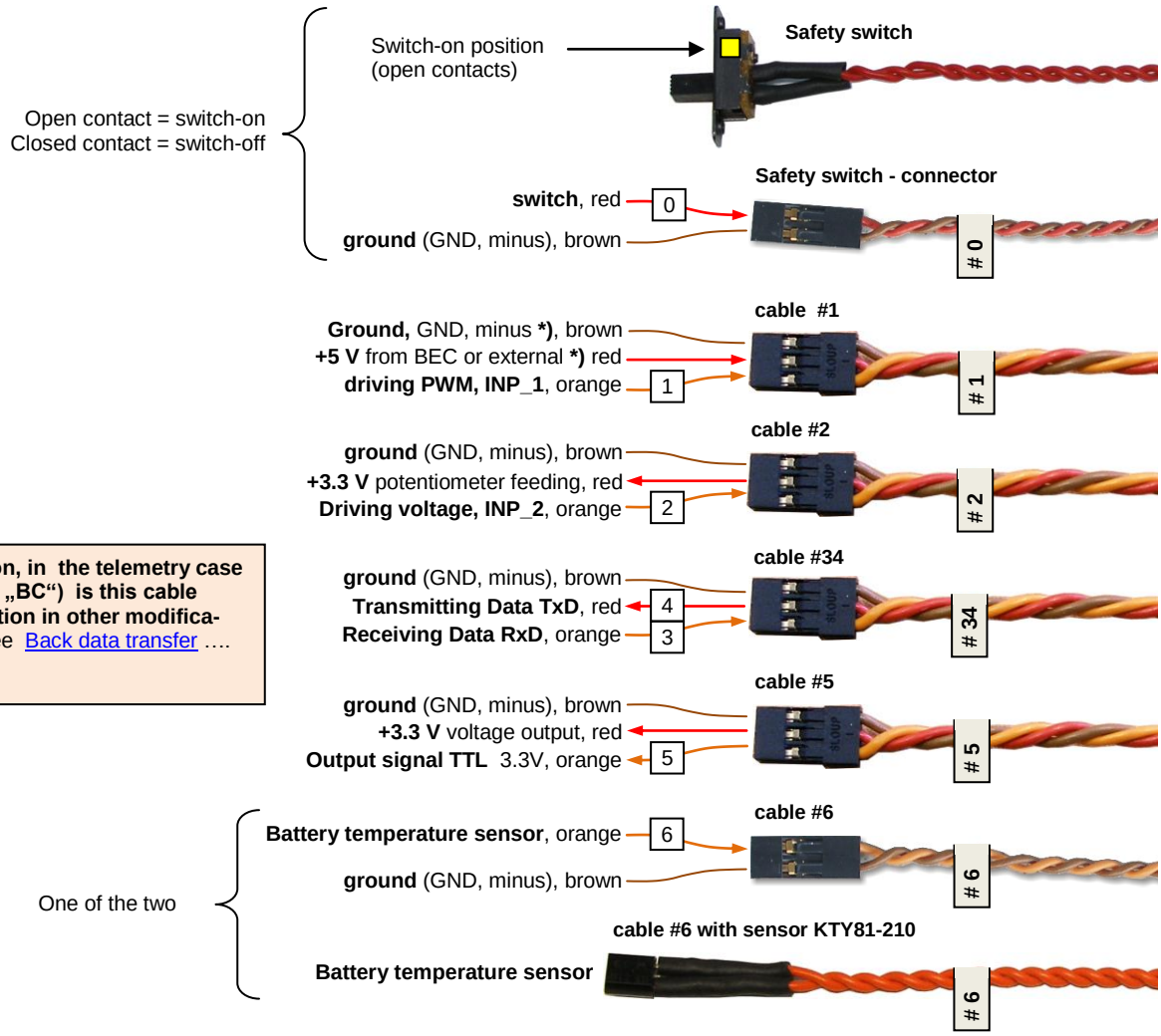

Attention, in the telemetry case (variant „BC“) is this cable connection in other modification ! see Back data transfer ….

***) Note:** in case of OPTO version is optocoupler feeds from external source and grounds (GND) are not connected together

Marking and Specification of the HBC controllers / allowed combination

Marking of **HBC_AAAVV_V7 HBC-series** Controllers - specification of options for ordering

Meaning of the specifications: **AAA** – nominal current/ **VV** – max. feeding voltage

Sample: TMM 10063-3 V7 HBC
AAA = 100 max. continuous current 100A (nominal)
VV = 63 max. feeding (traction) voltage 63V=

Switching DC/DC converter

Controllers up to 35V is possible order with internal integrate switching DC/DC converter. Output voltage of this converter can be used for supply (feeding) of cooperating equipment.

Current rating of BEC declines with higher temperature. DC/DC converter current rate is 2A continuously for 25°C and 6A for short time current peak. Short circuit on the output is tolerate some time without damaging.
Output voltage 5V, 6V, 7V and 8V is possible set in parameter **P40**.

Basic controller connection

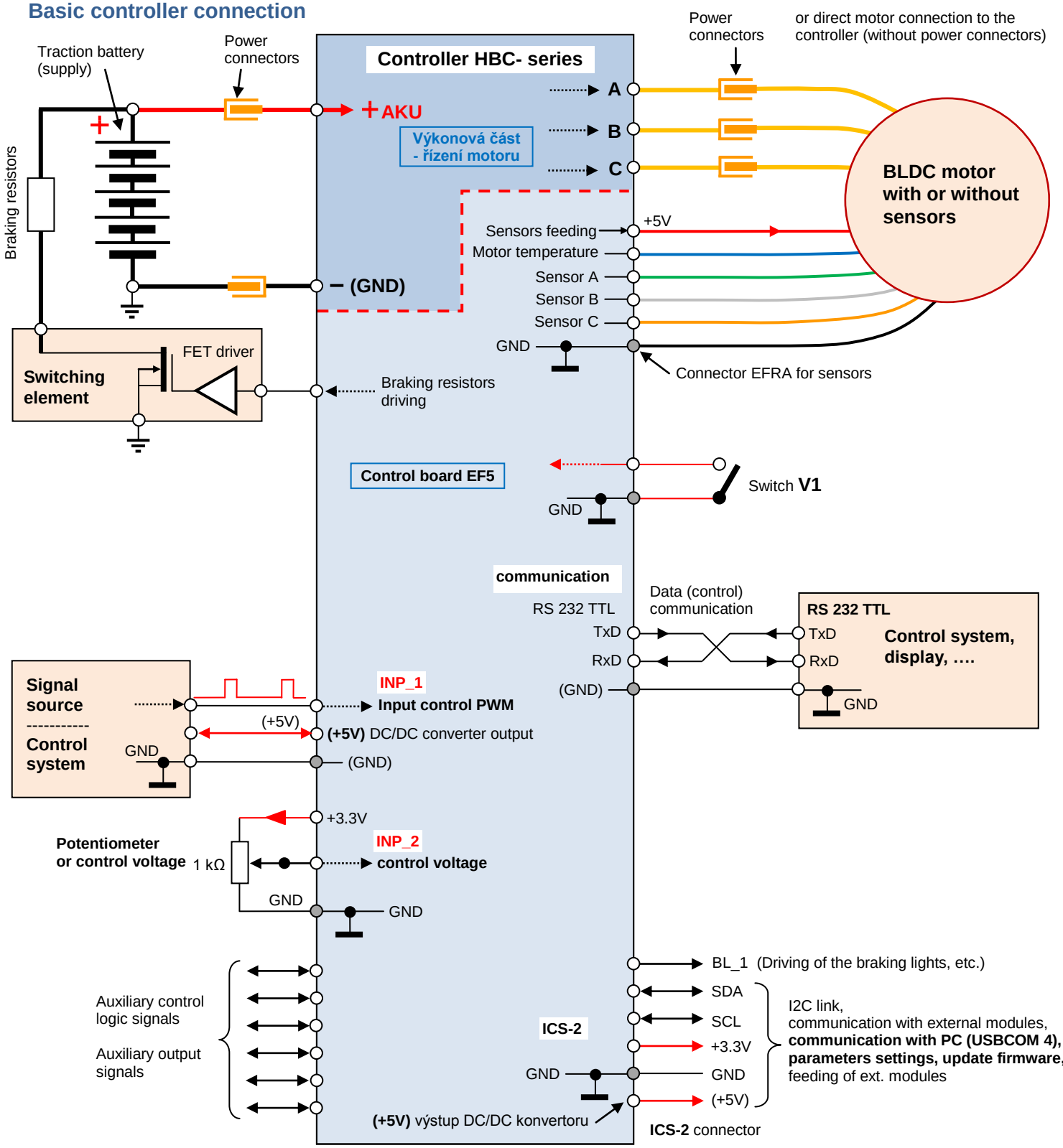

Note 1: Both inputs INP_1 and INP_2 can be the same, both should be controlled by voltage or potentiometer, both can be controlled by input PWM, etc.

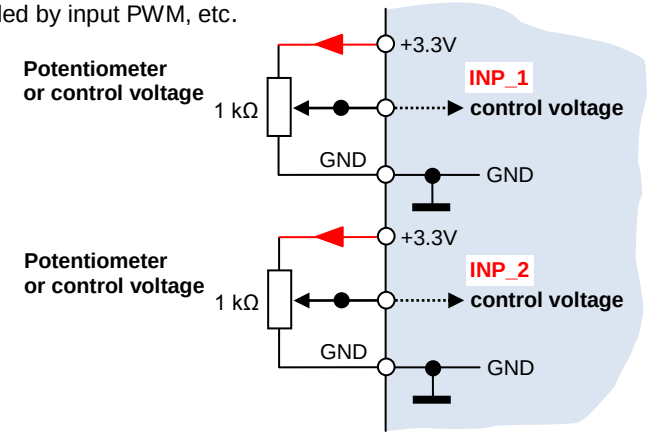

Connecting controller to the traction supply and turning on

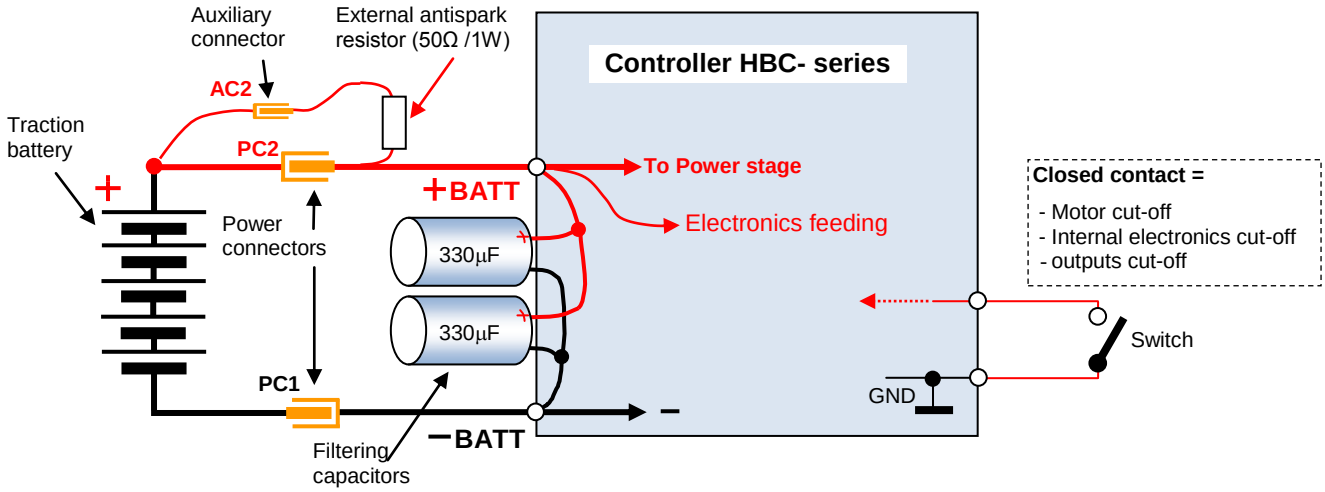

Note: Power connectors and auxiliary connector can be replaced by corresponding contacts of the power relays (contactors). Antispark resistor serves only to charge the filter capacitors! - Controller cannot be run (run engine) through this resistor, i.e. without connected power connector PC2. Through this internal resistor antispark cannot be supplied any other device !!!
For small traction voltage 12 to 16 V does not necessary to use antispark circuit, you can leave out.

Connecting and disconnecting the controller to the traction supply:

Before the controller is connected to any voltage, make sure that all inputs, outputs, control and motor are connected. When connecting additional or disconnecting existing inputs, outputs, sensors etc., the controller must be correctly **turned off and disconnected from all power supplies.**

Please follow the instructions for connection to the power supply:

1) connect minus pole of the battery „**–BATT**“ (GND), connector **PC1**
2) connect traction voltage (**+battery**) to „**+Antispark**“ input of the controller by connector **AC2** and wait a few seconds (filtering capacitors charging)
3) when the filter capacitors are charged, connect traction supply by connector **PC2** to input marked „**+BATT**“; now is the controller fully under voltage
4) if a switch is used ***)**, it is necessary to disconnect its contacts, so that the controller is turned on and ready for operation
   if no switch is used, controller has been turned on in step **3)** and is ready for operation

Please follow this procedure for disconnecting from the power supply:

1) **before disconnecting the controller from the power supply (or turn-off with the switch), motor must be at stand still !**
2) turn the controller off using a switch, if you are using one, by connecting the contacts of the switch (closed contact)
3) disconnect voltage from input marked „**+Antispark**“, connector **AC2**
4) disconnect traction supply from input marked „**+ BATT** “, connector **PC2**
5) disconnect minus pole of the battery **„–BATT**“ (GND), connector **PC1**

***)** Switch can either be a real switch, or a potential-free contact (reed relay, magnetic contact), optocoupler etc.

On / off internal power supply the controller is done safely connecting the control contact A), B) - when the failure (disconnection, breakage, etc.) does not turn off electronics and does not loss of control.
If you need to turn on the contrary, switching the controller by switch use the connection C), D).

A) By switch / read contact, etc.

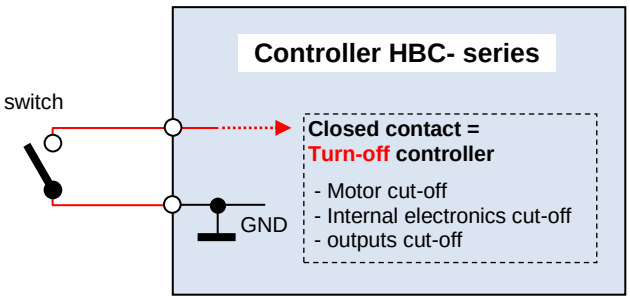

C) By external switch, etc

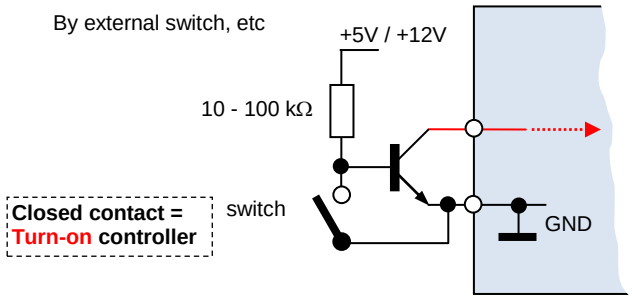

B) By external optocoupler, etc..

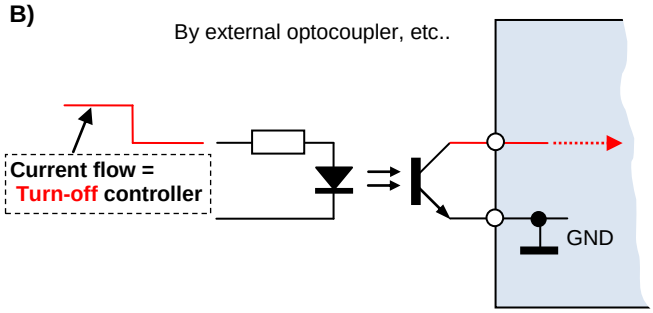

D) By external optocoupler, etc..

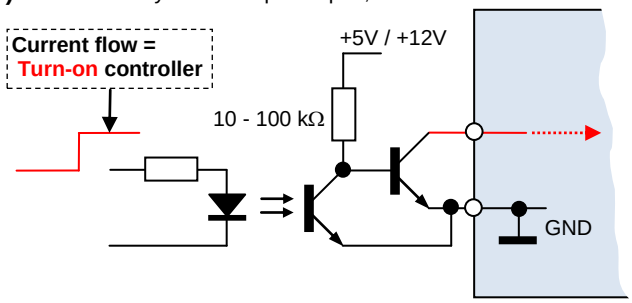

Control signals specification

Controller can be driven (depend on the customer specification) by some other modes (type of driving signals):

- **By input PWM**, width of driving pulse is 1 – 2 ms, pulses period 3.5 – 30 ms, can be galvanic isolated
- **By voltage** 0 up to +3.3V (resp. +5V or +10V, by specification)
- **By Potentiometer**(s) 1 kΩ
- **By Data transfer** (RS 232 TTL)
- **By Logic signal** (switch, TTL input, 0 – 24V voltage, by specification)

Type of control signal must be specified in the order. This is currently specified HW configuration of the control inputs!

For simplicity, in the whole manual is shown to control the joystick (throttle stick) - but it always corresponds to the other control methods (potentiometer, voltage, PWM input, data):

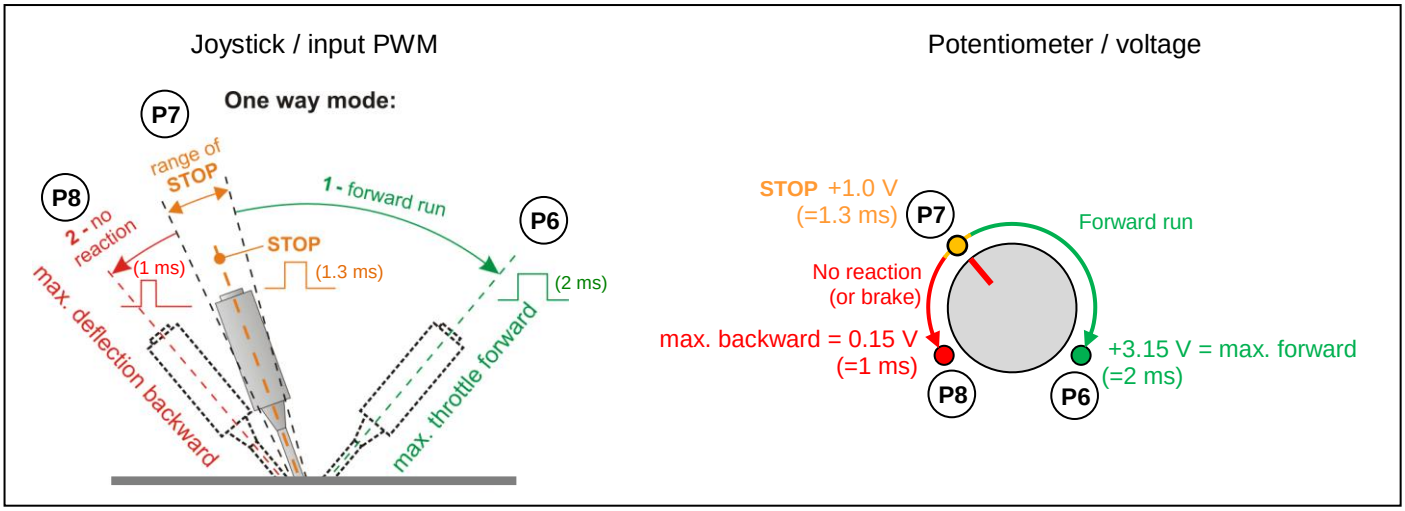

Note: If you do not need change the intensity of the brake, position (P7) may align with location (P8).
The brake can also independently control by the second (auxiliary) channel (with set parameters P9, P10 and P11).

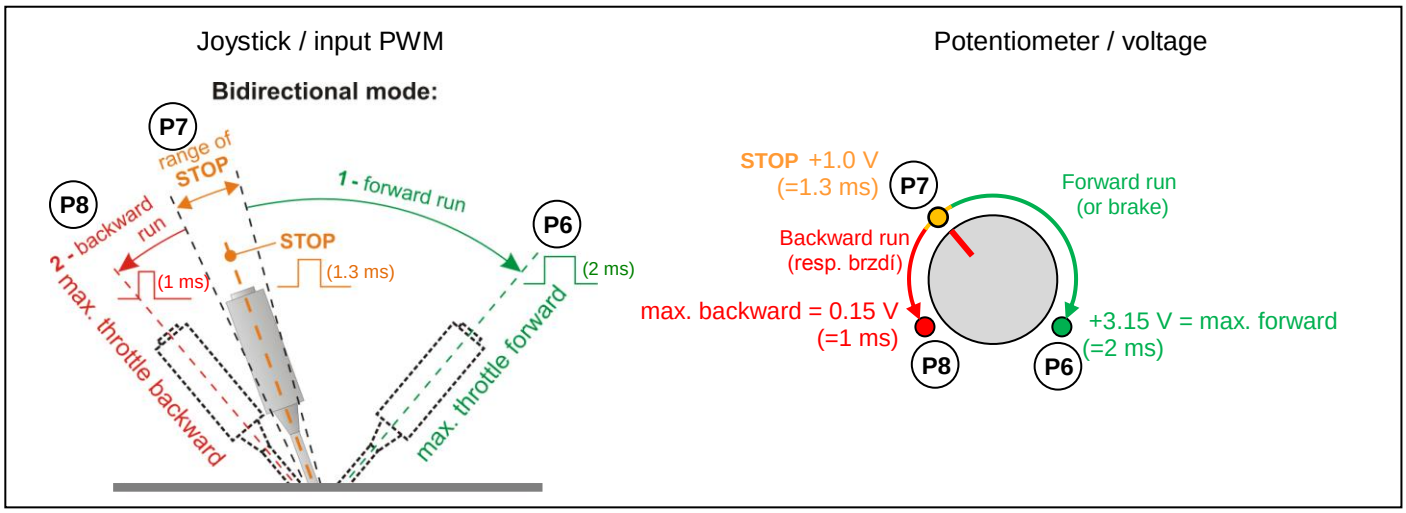

Specific values for the position (P6), (P7) and (P8) is set directly in the parameters of P6, P7 and P8 (main channel), resp. P9, P10 and P11 (auxiliary channel).

That each position corresponds with behavior by set driving type (type of model – car, boat, etc.) Both end points as well as middle position cannot have these concrete values – these values can be set in large range (by program „***Controller 2***“).

(P8) – **throttle stick fully backward** = minimal width of driving pulses PWM (1.0 ms) = minimal driving voltage 0.15 V = potentiometer fully „on the left side“, i.e. nearest to ground terminal.

(P7) – **throttle stick somewhere in the middle** = middle width of driving pulses PWM (1.5 ms) = middle of driving voltage 1.65 V = potentiometer somewhere on the middle position.

(P6) – **throttle stick fully forward** = maximal width of driving pulses PWM (2.0 ms) = maximal driving voltage 3.15 V = potentiometer fully „on the right side“, i.e. nearest to “upper” terminal (nearest to +3.3V).

Voltages are reported for potentiometer (powered from the internal voltage +3.3 V).

When driving voltage (but not by potentiometer !) may also be a max. voltage of +5 V to 5 V input range or +10 V to 10 V input range.

Control by data transfer.

When controlling is realized by data transfer, following possibilities can be choice:
- standard line **RS 232** or bus **RS 485** or **CAN** (also optically insulated – see specification)
- or **RS 232** line with **TTL** level (advantage fr direct communication **processor** – **processor**). Controller cooperates with 3.3V systems, as well as with 5V systems. In this case line is defined like this:

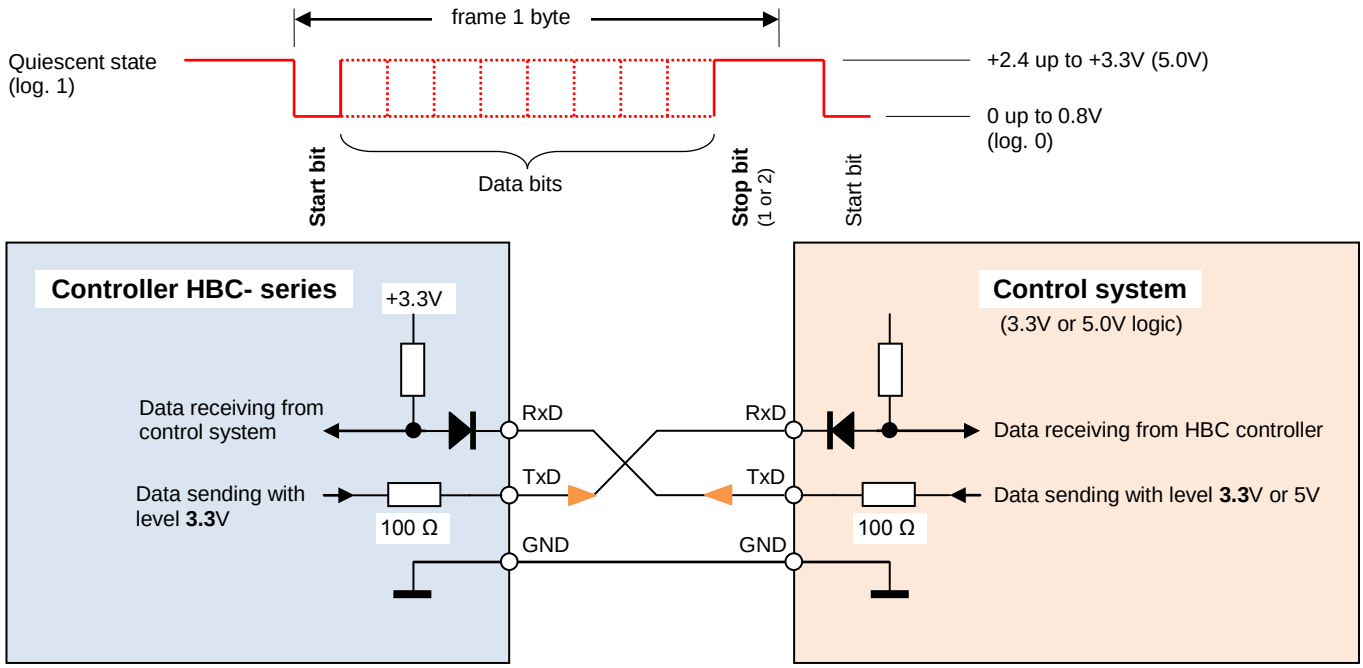

Controller sends data with 3.3V level.
Controller receives correctly data from control system with 3.3V level, as well as 5.0V level.

Control by input PWM.

Control signal definition:
Control information is Pulse width.

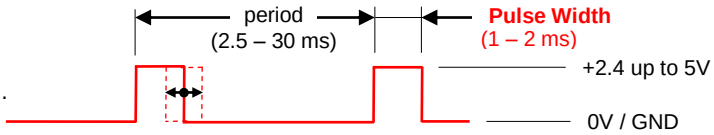

Controllers without galvanic isolation for input PWM:

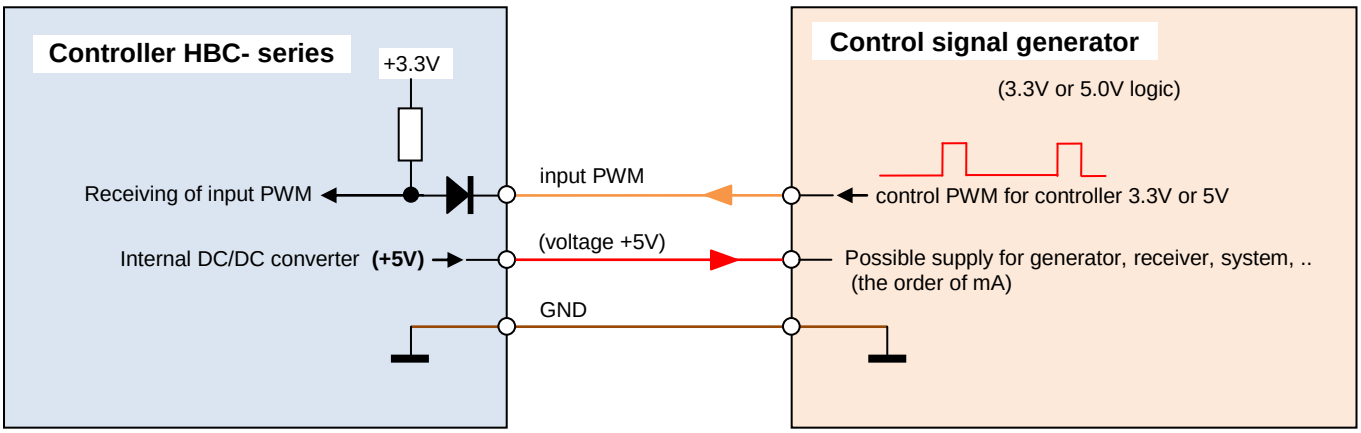

Controllers with galvanic isolation for input PWM:

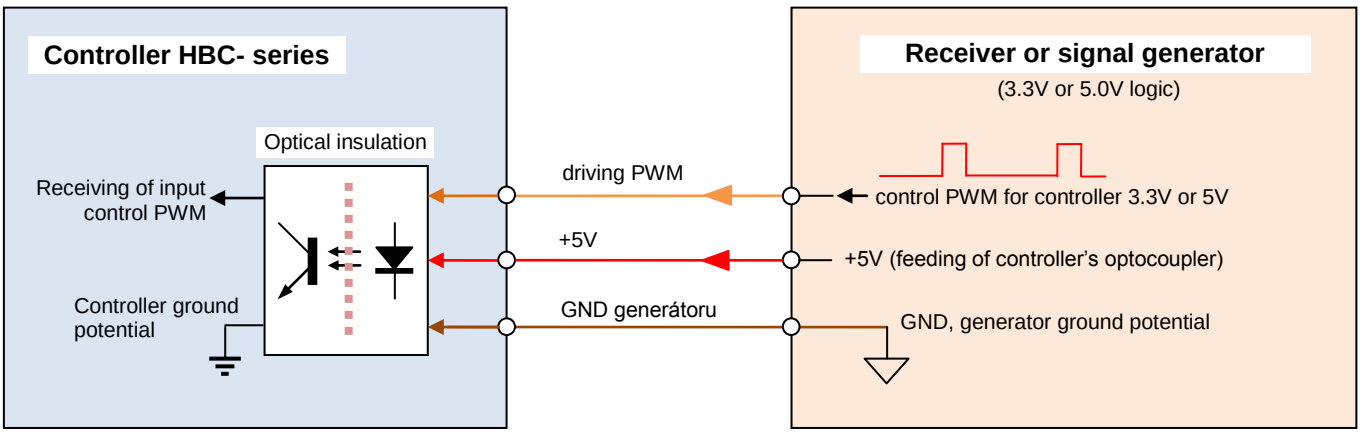

Control by potentiometer.

In case, potentiometer is connect by longer cable (>20 cm), we recommend use shielding cable. Shielding connects to input GND point of the controller:

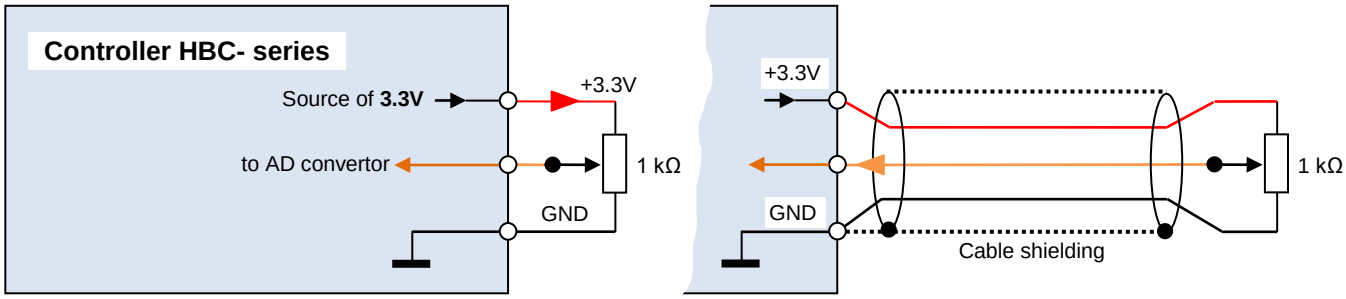

Control by voltage.

Source of control voltage must have low impedance << 1kΩ.

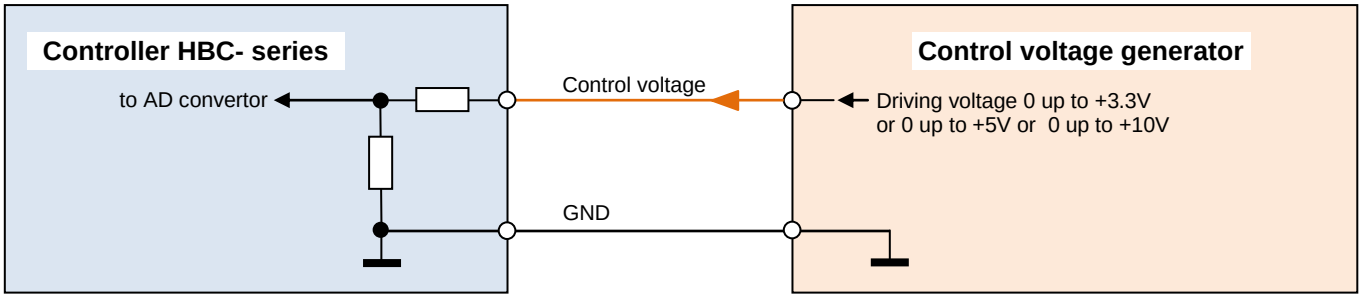

Control in case "separate brake / throttle", reversing the direction of rotation.

If you set the parameter **P4** "separate brake / throttle", each of these functions is controlled by a separate potentiometer (voltage, PWM). Brake function has priority, i.e., if gas is set to a nonzero value and activate the brake, the engine is disconnected and is actively braked proportionally, regardless of the **throttle** position (value). At the moment deactivation of the brake (= neutral, min. position), assumes the function of **throttle** again and the engine is powered by the settings of the **throttle** value (according to the potentiometer, the PWM…).

Both of these functions, i.e. **throttle** and **brake** are configured in unidirecdtional mode; from the neutral position "back" (if not set to the same value with neutral) ignored. If you need the engine reversed (direction of rotation reverse) can not be achieved through the neutral gas going to the "backward" (can not enable bidirectional mode). You must use an external input for changing the direction of rotation. By default, this function uses the input channel RxD, RS232 TTL, settings in **P54** (but then can not use this type of communication), see next page.

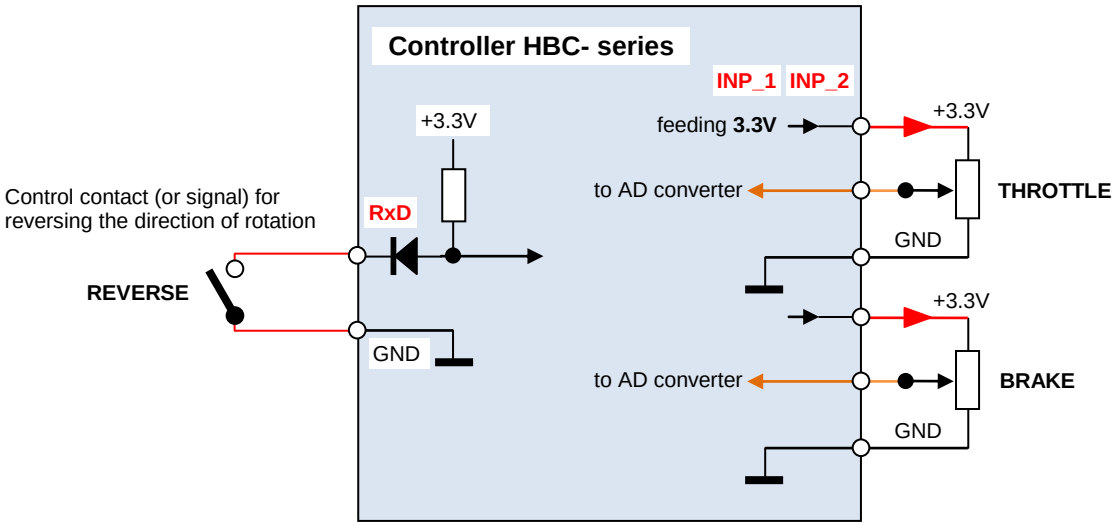

Control and additional control by logic signals

Control by logic signal (function A).

The controller can be operated only by logic signal (on / off), applied to the control input "**INP_1**". Speed (power, torque, etc.) in the **on position** can be defined by setting the parameters **P19**, **P20**, **P50** (various limits) or the engine goes to the full power. The speed of acceleration ramp is again given by parameter **P16** “Acceleration”.

Enabling engine running by logic signal (function B).

In case you need switch on / off running of the engine by switch, contact or logical signals, but the speed (power, PWM, ...) are managing by signal at the input "**INP_1**" or "**INP_2**", auxiliary permitting input (gate) is always carried by the second (for control unused) input or INP_2 INP_1. This gate (permitting) function can be activated by parameter **P41**.
If necessary, this permitting signal (gate) may be also moved to another port, of course, if it is free and available, this is customization.

Start the controller after turning on is determined partly by setting **P5** (safe, fast, immediate), second by the logical state of the control signal and, if selected "function B" also level of the main control signal (voltage, input PWM, potentiometer).

Galvanic non-isolated control input:

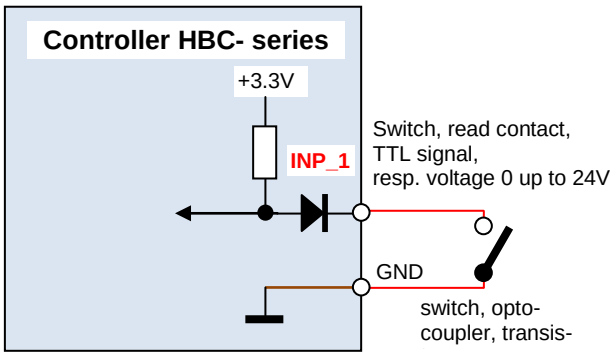

Galvanic isolated control input:

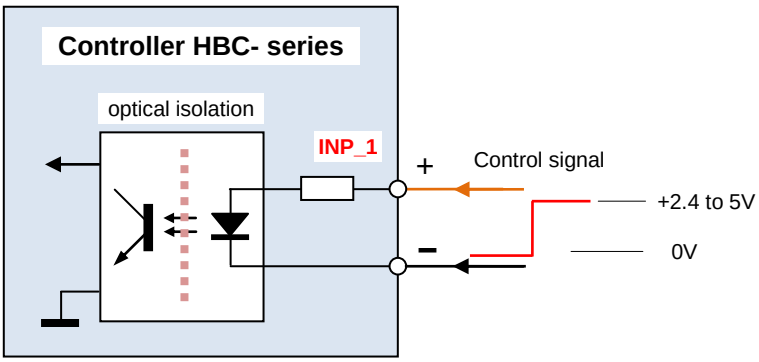

In the event that both inputs **INP_1** and also **INP_2** used for control, it is possible to move the gate function to the input **TxD** and activate by parameter **P41**. The same time it must be defined in order (normally the port is used as the output port for communication in HW).Of course, if this function is used, you cannot use the communication channel RS-232 TTL.

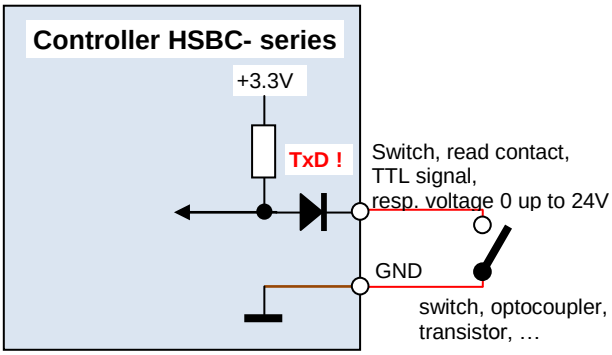

Control motor rotation direction by logic signal (P54).

The direction of rotation of the controller can be independently controlled by by logic signal (one direction / opposite direction) on the **RxD** input. This must also correspond with the settings of the parameter **P54**.

Galvanic non-isolated control input:

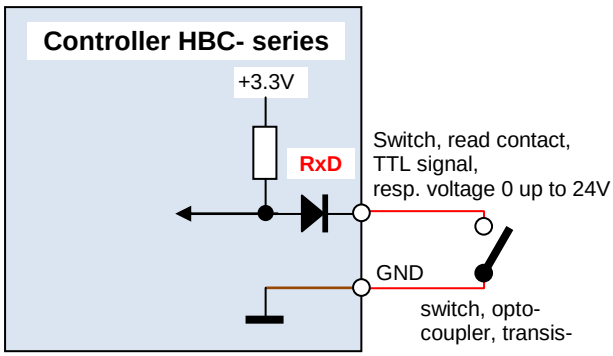

Galvanic isolated control input:

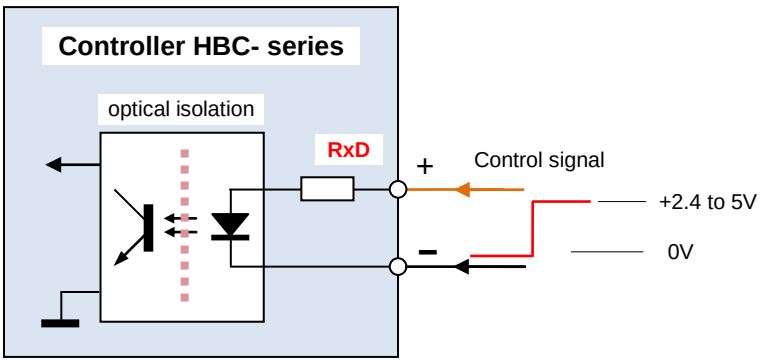

Of course, if this function is used, you can not use the communication channel RS-232 TTL.

Cooperation with RC Remote Control

When you need or is necessary used industry version of the controller in the model or you want only use transfer path of RC equipment:

- Receiver and antenna should be placed as far as possible from the motor, controller, the batteries and power leads.
- Controller's cable #1 connect to the receiver, throttle channel.
- When you use (you have) controller with telemetry (BC version), connect cable #34 to corresponding channel of receiver.
- For OPTO versions (i.e. without BEC) you must use external supply for receiver and servos (receiver battery, external BEC, …)
- For BEC version (here is marking by this version with internal DC/DC converter, need for receiver and servos feeding) you can connect receiver (safety) battery parallel to BEC for safety increase ***)**, see fig. e)
- When motor rotate to other side than you need, you can swap two motor cables (only for sensorless motors !) or change parameter settings (parameter Reversal of motor revolution).
- When you want use sensor motor (SE version of controller), make „Automatic sensor settings" before first start.
- The controller switch is connected safety so that drop-out of BEC voltage is not possible if the switch fails (safe connection).
- Controller is turned-on by open contact of the switch or by connecting the accumulators (applies to versions without the switch).
- When you use more than 4 Lipol cells (more than ca 16V), use „antispark" resistor for first battery connection, see: Sparking prevent when connect higher voltage

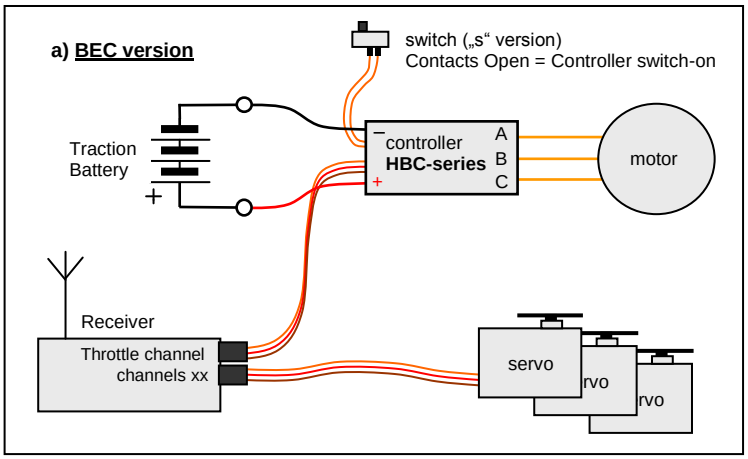

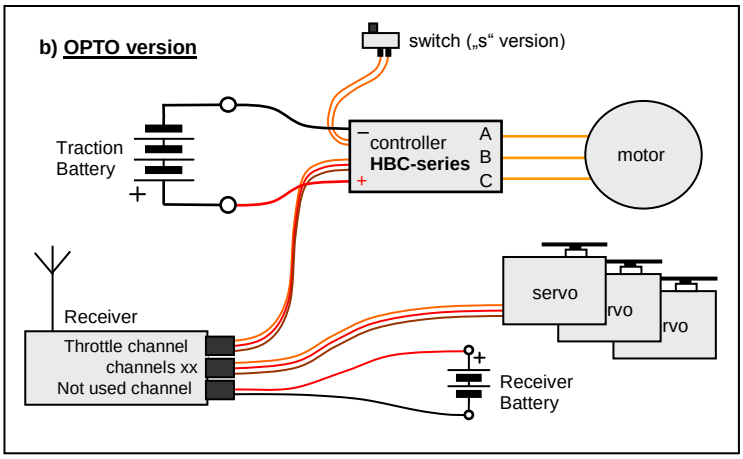

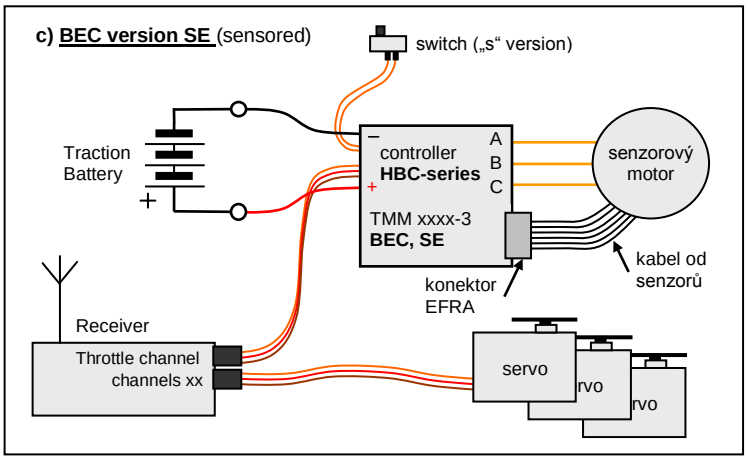

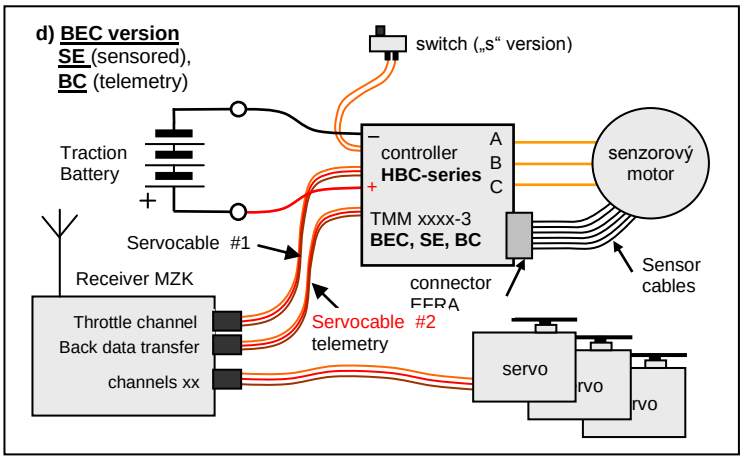

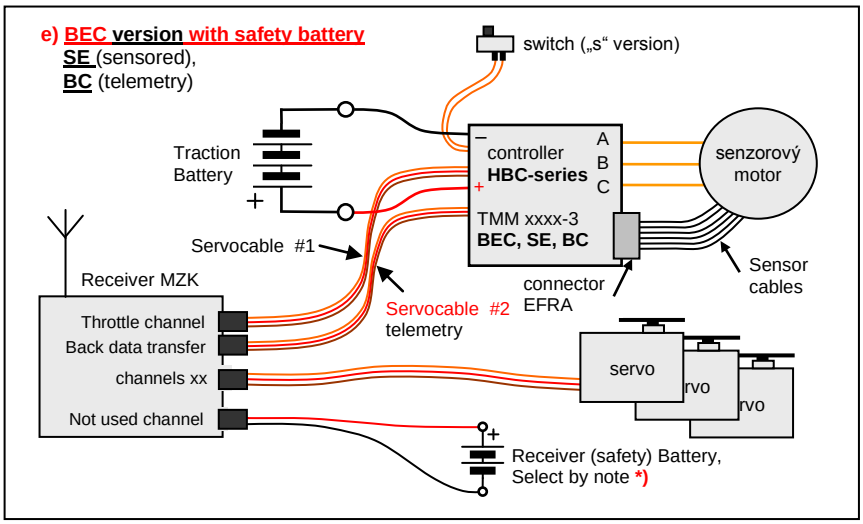

Notice:
(only for versions with BEC !!!)

If you need to feed the receiver or servos from some other source than BEC, carefully take out the central core of the servo cable connector (red wire) and insulate it properly **!**

With OPTO versions
DO NOT TAKE OUT the core !!!

***)** for 5V BEC voltage connect 4 Nixx cells
for 6V BEC voltage connect 5 Nixx cells
for 7V BEC voltage connect 2 A123 cells
for 8V BEC voltage connect 2 Lipol / Li-Ion cells

The easiest way to connect a receiver battery for free channel of the receiver or receivers in position to connect the receiver battery, like OPTO controllers without BEC, see Figure b) Opto version

Connect this battery only after controller is on and disconnect first when switching-off controller.

Control signal – correct limits and emergency conditions

Controller monitors presence of driving signal continuously (input PWM, voltage range, potentiometer connections, data transfer). When find not correct driving signal range, absence of driving signal, potentiometer defect etc., activates emergency stop regime, with parameters **P38** (Masking time for signal lost) and **P39** (Brake intensity for signal lost), which defines all the emergency stop process.
Detail description follows.

Control by Potentiometer:

Control potentiometer has connect resistors with low values to both terminals, include “pull-up” resistor connect between brush and system voltage +3.3V. These additional components bring potentiometer monitoring – if not cut some of terminals or connection wires, if brush is not shorting. In all these emergency cases is driving voltage moved to “Restricted area H or L”, i.e. out of correct voltage range and activates emergency stop routine.

For elimination of components tolerances, between Correct range of driving voltage and Restricted areas tolerance zone (safety zone). Also in this area is driving signal interpreted as Full throttle forward or backward.
For real “safety zone” function, driving signal is not present in this area (standardly). This realized parameter **P13** (tolerance of end position). When driving signal reach to these values, is always evaluated as correct Full throttle forward or backward – always is guarantee that driving signal reach these “end positions” of driving signal with components tolerances.

This protection mechanism decrease partially available range of used AD converter (~ about 10 - 15%, i.e. from 4095 values to ~ 3680 up to 3480 values). In practice is not decrease controllers resolution (or smooth of driving), but significantly increase system safety. Concrete values are determined by settings of parameters **P6**, **P8**, **P13**, respectively also **P9** and **P11** (auxiliary driving channel).

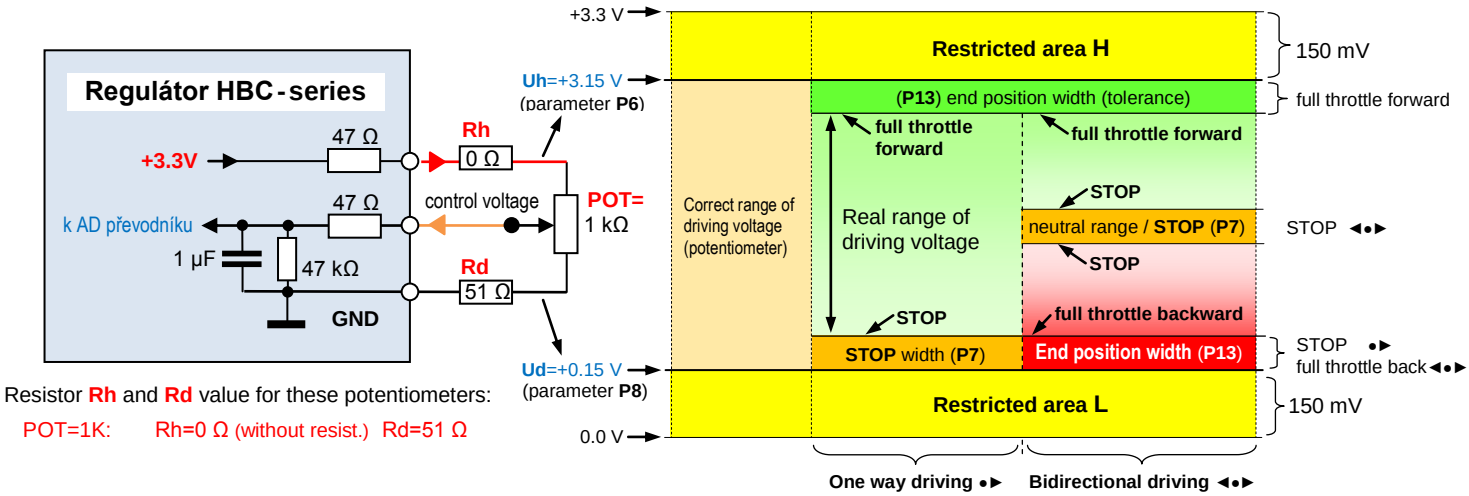

Resistor **Rh** and **Rd** value for these potentiometers:

POT=1K: Rh=0 Ω (without resist.) Rd=51 Ω

Control by Voltage:

The situation is very similar to the control by voltage from an external generator (voltage source, DAC of superior system, etc..) - connected between the terminal GND and terminal "control signal". An error condition occurring during control voltage drop, during cutting of wires or during short circuit signal to ground (GND) activates the emergency stop. Also bring a higher voltage than the nominal (i.e. +3.3 V / +5 V / +10 V) internally causes a shift in the prohibited zone (above 3.15V) and activating the emergency stop occurs as in the previous case. Similarly, the voltage less than 0.15 V is taken as an error condition. Keep in mind that the source of control voltage must be low impedance (< 1 kΩ).

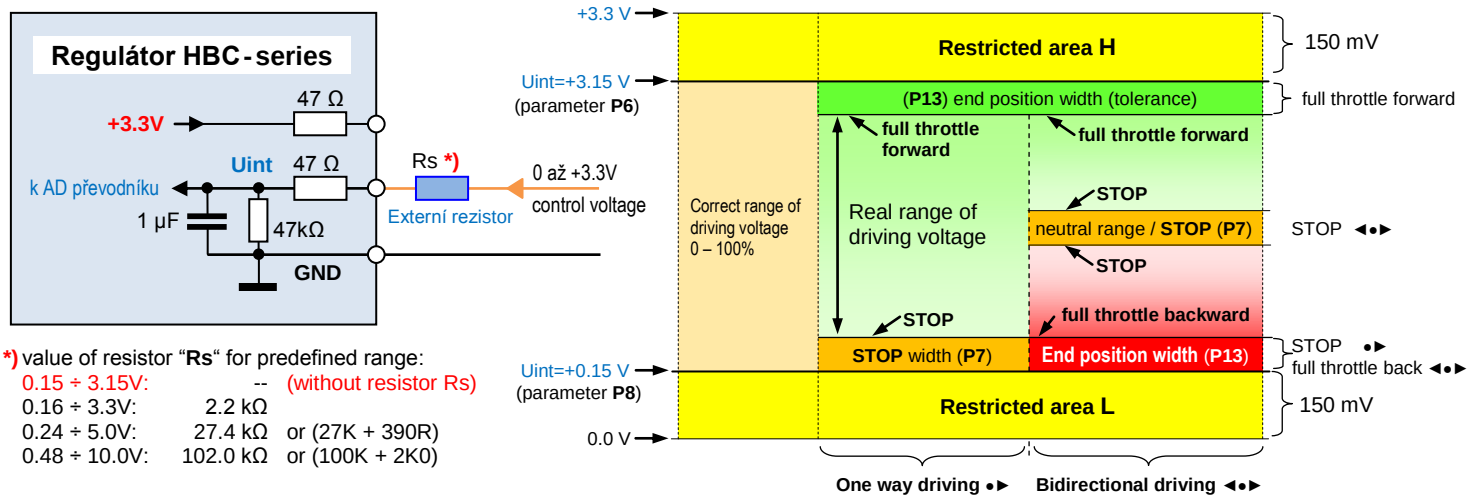

*) value of resistor “**Rs**“ for predefined range:

0.15 ÷ 3.15V:	--	(without resistor Rs)
0.16 ÷ 3.3V:	2.2 kΩ	
0.24 ÷ 5.0V:	27.4 kΩ	or (27K + 390R)
0.48 ÷ 10.0V:	102.0 kΩ	or (100K + 2K0)

Note: If necessary, you can "Prohibited areas H and L" suppress (disable) by the parameter **P90** and the control range increase to full range of 0.0 to 3.3 V.

Control by input PWM:

Here is similar situation. When lost signal from driving PWM generator or signal parameters go outside from limit range, or cut signal wires or shorting of these wires (together or to GND), after time "masking signal drop" **P38** is activated emergency stop procedure, as in previous cases.

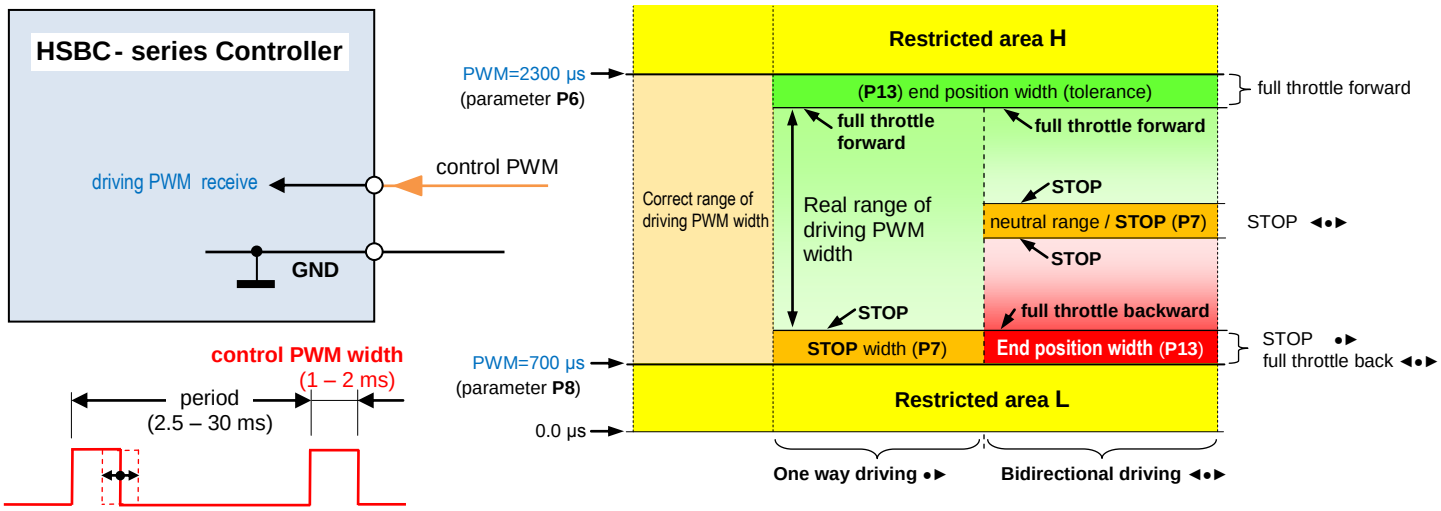

Although the standard width of the control signal in the range 1-2 ms, the controller tolerates a wider area.

Control by data transfer:

Again similar situation is also in this case. When driving data transfer lost or interrupted (data transfer period is longer than limit value **P38**), when signal (data) shorting together or to GND, activate emergency stop of the motor.

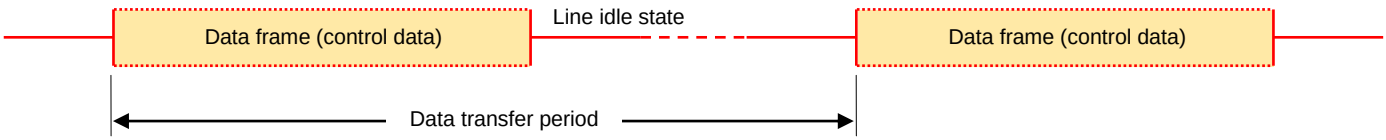

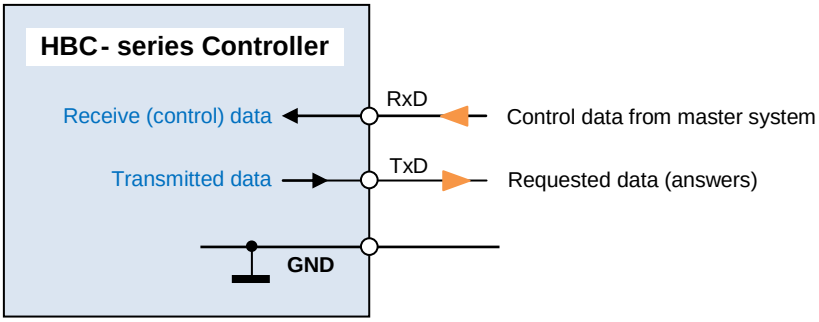

Back data transfer, telemetry (only for controllers marking „BC“).

If you need some information or data to monitor in traffic in real time, at a distance (i.e. cannot be used "Monitoring"), it is possible to use some sets of modules for remote control and the data transfer and display their help with.

Controllers with „**BC**“ modification has not only general servocable #1, but also second cable #34. This cable transfer data from the controller to receiver (and receiver transfer these data subsequently to transmitter side). This cable #34 is connected to corresponding channel of receiver (for details see manual of receiver).

Necessary set corresponding data format, in parameter „**telemetry**“ by program „***Controller 2***“ (as for example **TWIN** for receivers and RC equipment of **MZK servis** company or **HOTT** system from **Graupner**, etc.)
Display unit, which displayed transferred data, connect to transmitting module 2,4GHz of your transmitter.
For connection and set receiver, transmitting module and display unit follow instruction for these components.

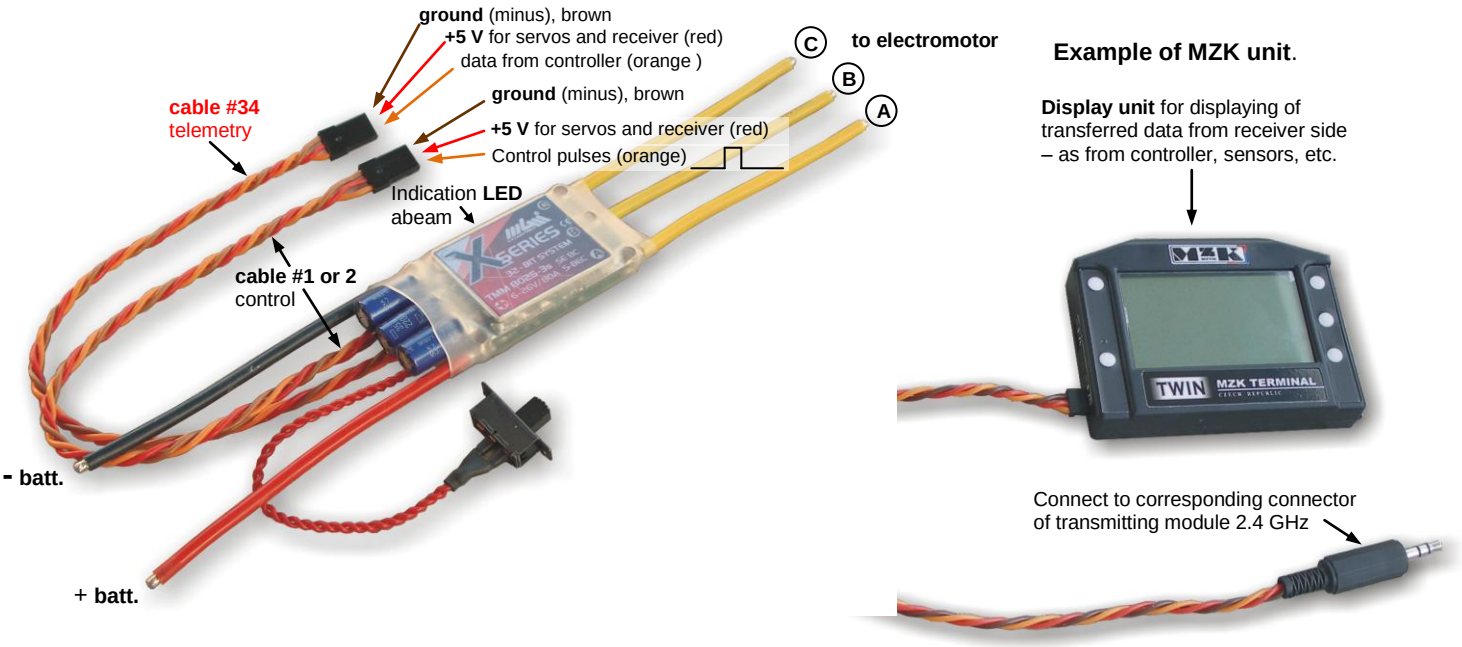

Cable #34 modification for telemetry:

Note: BEC voltage, on the middle pin of this connector, is available only for BEC version of the controller. In case the controller without BEC system, no voltage is present on this pin.

Connecting:

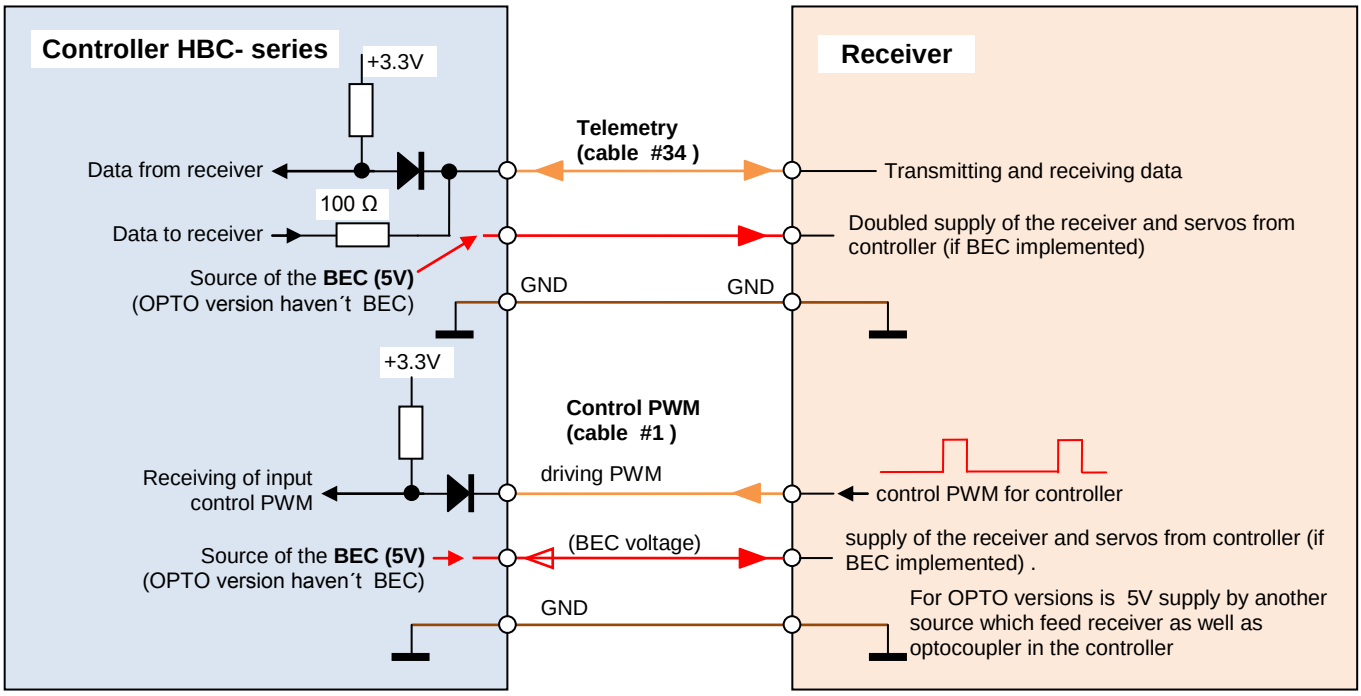

Sensor motors and controllers

Sensor motors (BLDC motors with sensors) can have generally different connector and variously connected.

If you have a motor with any sensor connector or if you are not 100% sure of connecting the motor sensor wires and/or motor power cables on separate phases, it is necessary make to first "Automatic sensor settings". This mean before any start or testing - the first engine start with the sensors must be in "Automatic sensor settings" mode !
Otherwise, you risk the destruction of or damage to the controller.

This is very advantageous to make, even if you know the good connection of phases and sensors, because many of these engines does not have sensors in its optimal position in relation to the stator and during operation created unnecessary losses - "Automatic sensor settings" eliminates this imperfections and optimize sensor settings for such engines.

If you replace the engine, repeat this initially settings.

IMPORTANT: If the motor spins in reverse than you need, necessary change the direction of rotation in parameters. You can also swap the other two phases as for sensorless motor, but must run again "Automatic sensor settings", the learning process.

In all cases it is necessary to strictly observe distribution of "Pin connector description", see "Summary of possible inputs / outputs".

If you are not sure the sign and the connecting of each sensors (Sensor A, Sensor B, Sensor C) or as the phases marking (A, B, C), does not matter, with this controller in the "Automatic sensor settings" to order. **Other wires must not be mistaken !**

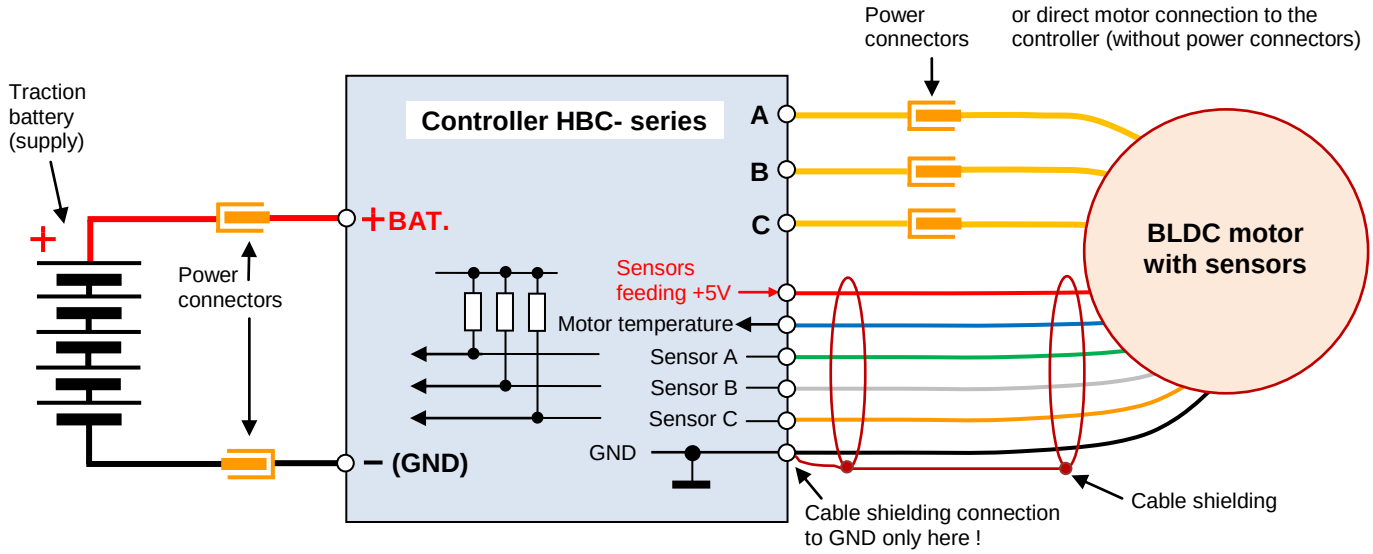

Note: Shielded cable to the engine sensors, when used with shielded cable, must be connected to ground (GND) only for the controller side - must not be used as a negative lead for sensors!
Shielding must not be connected to ground (GND, chassis) anywhere else than on the sensor connector of controller !!!

Pull up resistors for the individual sensors are integrated in the controller. They may (but need not) also be on the side of the engine (2K2 resistor). In any case, the feeding of sensors (on the engine side) must be filtered by 100nF ceramic capacitors or a better by 1µF. The temperature sensor may not be connected to external pull-up resistors.

Automatic sensor setting procedure

This setting is necessary make on the not loaded motor – i.e. without propeller or pinion for gear. In this procedure, **you may not also have limited speed or current.**
The procedure can also be made at reduced power supply voltage than the nominal operating voltage (of course in the range of operating voltage) - some unloaded motors could in that case operating at full voltage exceed its own speed limit!

1) connect motor to controller, include sensor cable, connect to PC and turn on controller.
2) in program „***Controller 2***" set parameter P46, **Motor type** to „**Sensor motor – Automatic sensor setting**"
3) write this setting to controller by button „**Write setting**"
4) turn off controller (USBCOM 4 is possible disconnect)
5) turn on transmitter
6) when controller is not connected to receiver or signal source, connect now, to throttle channel (for OPTO version also turn on receiver supply / generator +5V supply for optocoupler in the controller)
7) turn on controller again, if you don´t set throttle limits (= you have automatic limits), must go through the initial setup limits procedure, i.e. until state of lighting **blue LED** and **yellow LED** (throttle in Neutral position) ……..……..... 
8) move throttle stick to full throttle forward, controller start run motor and automatically stop ……..... 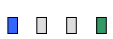 or 
9) LED indicate correct finishing of this operation by **blinking of blue LED** …….. 
(in case of some problem start **blinking all LEDs** …… )
10) if you don´t see LEDs (controller is somewhere inside model) you can check correct finishing of this procedure by this way: move throttle stick back to STOP position and try increase throttle again → motor must not start run now
11) switch-off controller, sensors position and phase are correct and optimize, after correct finishing procedure controller automatically switch **Motor type** parameter to "**sensors**" – you can check this also by read data via program ***Controller 2.***
12) when you turn on controller now, working with sensors – you can connect load to motor (propeller, pinion, ..

Note: After correct finished procedure controller automatically switched parameter settings to "sensor motor", you can check this via reading data from the controller by program „***Controller 2***". This setting is remembered (up to next start of this procedure).

When procedure finishes not correctly, checks connectors, sensor connections, and start procedure again.

SENSOR MOTORS:

Sensor motor according to **EFRA** specification**:**

- must have 6-pin JST ZH connector model ZHR-6 or equivalent, marked as SZH-002TP0.5 26-28 awg. for sensors and heat sensor connection

Pins specification of this connector:

Pin #1 – black wire, ground potential (minus)
Pin #2 – orange wire, sensor phase C
Pin #3 – white wire, sensor phase B
Pin #4 – green wire, sensor phase A
Pin #5 – blue wire, motor temperature sensing, *10 kΩ NTC*
(other end of sensor is on ground potential, pin #1)
Pin #6 – red wire, sensors feeding, *+5.0 V ± 10%.*
(supply voltage for sensors provide controller, don´t connect external voltage !)

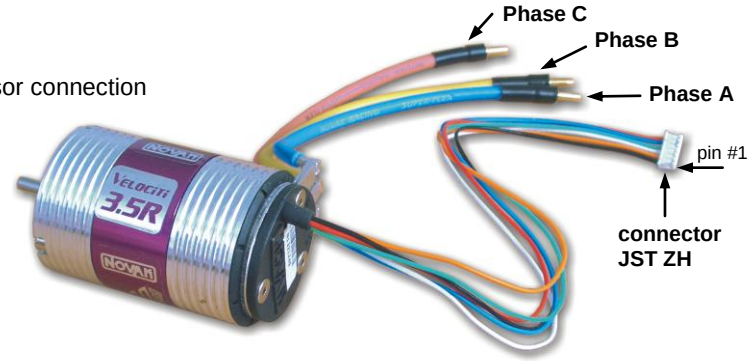

Example: Motor by NOVAK, Velocity 3.5R Brushless Motor

- power wires are marked A, B, C – connect to phases of controller, with the same name.
A for phase A
B for phase B
C for phase C

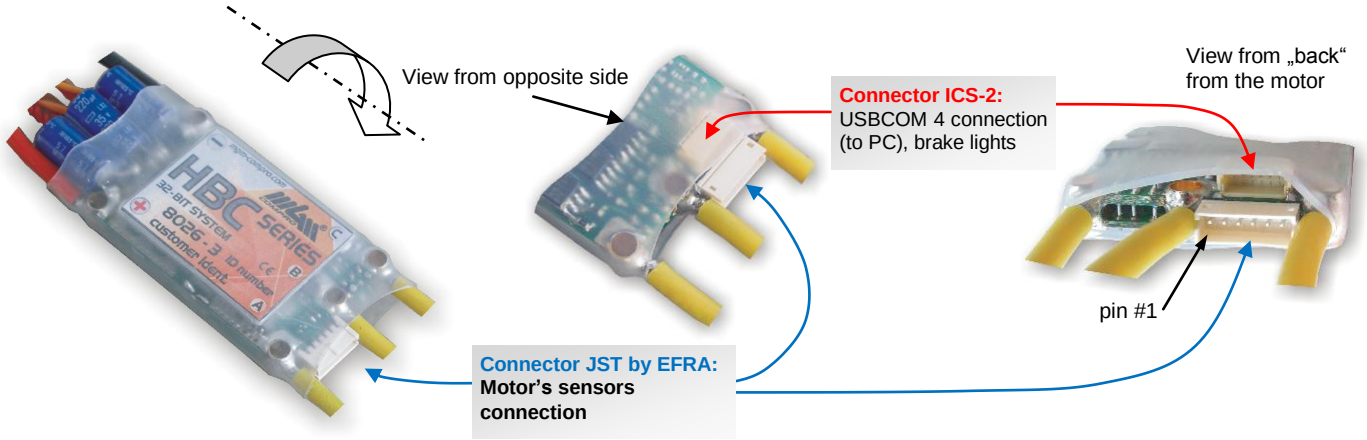

Optimal and allowed motor sensor position

Next picture displayed correct relative position all phases voltage (back EMF) and sensors. Phase voltage, as well as sensor signals, is offset by 120°. Optimal sensor position is such that sensor signal edge correspond with “zero crossing” moment (marking by red ring on the phase voltage).

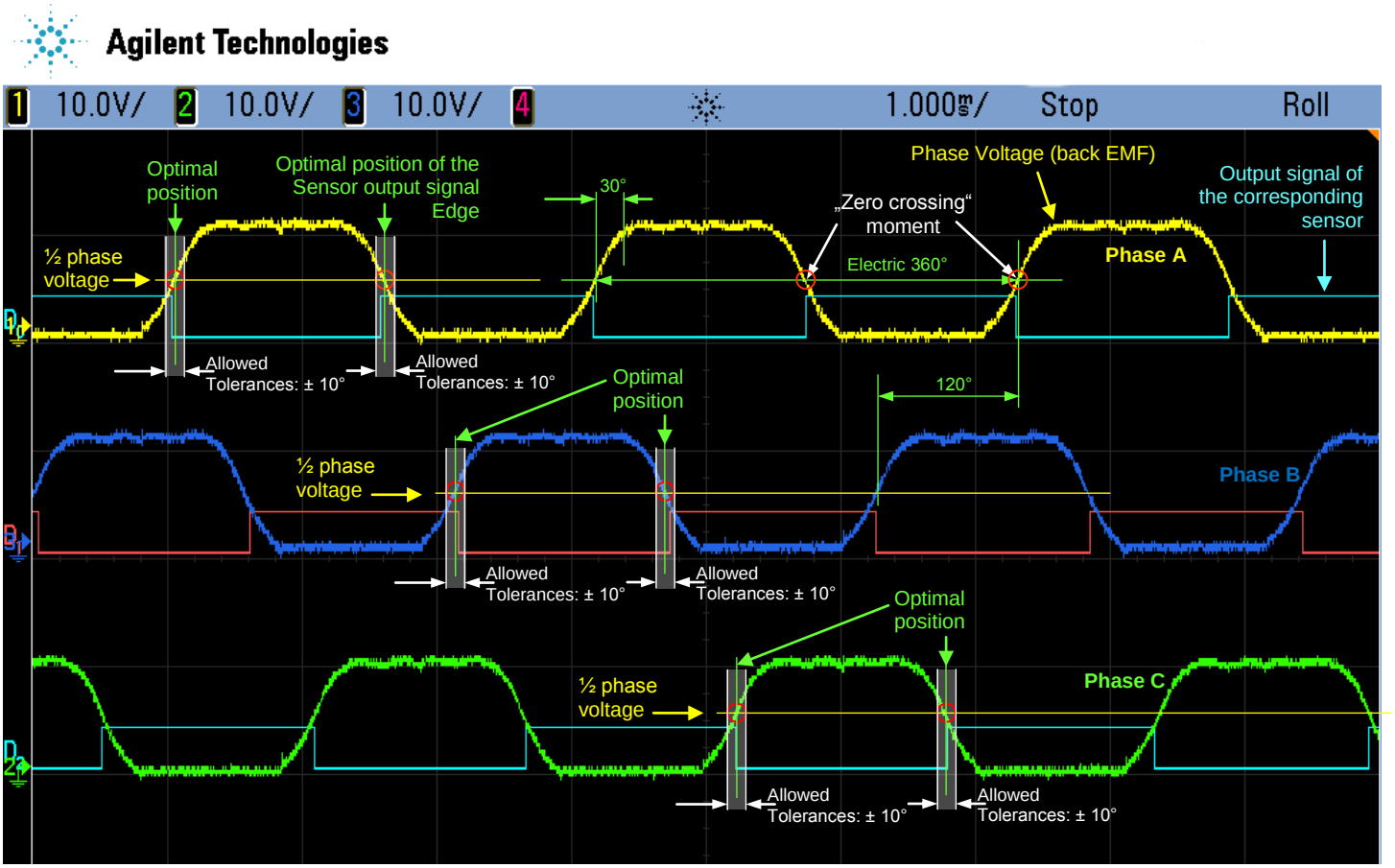

Controller can compensate these sensor’s differences from optimal position. However here are some limits. When is edge of the sensor signal **before** zero crossing, maximal possible timing value is not limited. In case, this edge is **after** zero crossing point, value of maximal possible timing is lower (30° minus this difference).
When you change rotation direction, sensor position is “swapped”, i.e. sensor signals which had edge before zero crossing point will be after zero crossing point and vice versa – with all limitation for limiting maximal possible value of the timing.

Therefore we recommend difference from optimal position of the sensors up to ±10°. In this case is available timing up to 15 – 20° for both direction of the motor rotation – this value is enough for most the motors.
When your sensors have higher differences from optimal position, controller eliminates this value, but maximal possible timing value is decrease for some of rotation direction.
In case, your motor don´t need timing (timing is 0°), tolerances of the sensors position from optimal position can be higher (up to ± 25°), controller eliminate these differences.

In case, differences of sensors position are more than 25 – 30° electric (include magnet dimension tolerances and its positions !!!), controller cannot eliminate these differences and signalize error (sensors error, motor error).

Two poles motor have identical electric and mechanical revolution (360°). This is not valid for motors with more poles.
For example 4-poles motor have one electric revolution by 180°mechanical revolution (360/2=180). This means two electric revolutions /one mechanical revolution. Etc.
Therefore motors with more poles have higher demands on mechanical accuracy. Motor with 12 poles have one electric revolution on 60° mechanical degrees (360/6=60), therefore maximal mechanical tolerances for sensors position is ±10°/ 6 = ±1,67°!!! (max.). The same criteria are valid for magnets.

inspection:

If you are uncertain about the location of sensors (or their output signals), you can easily check.

- The controller mode switch to sensorless
- Disconnect the engine from mechanical load (propeller, gearbox, ...)
- Spin the engine at full throttle by controller
- Measure by oscilloscope (2 channel at least) both the phase voltages (successively A, B, C), while each corresponding sensor the output. You get similar waveforms as shown above. Important is the position sensor output edges to the passage of zero..

Basic operating modes - mode choice and basic type of behavior

The regulator has a preset several basic modes (or types) of behavior that can be combined with PWM, constant speed, constant torque.

Joystick without neutral position (non-latching STOP)

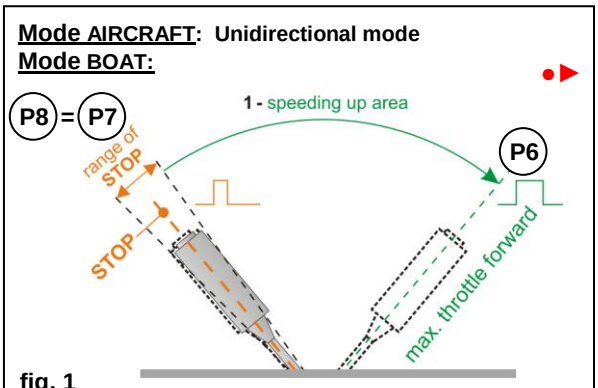

fig. 1

One-way aircraft - brake in neutral (MIN = STOP) **can be** activated
One-way boat - brake in neutral (MIN = STOP) **cannot be** activated
STOP position is identical with the position of "full brake" (**P7 = P8**)

Joystick with neutral (with lock the STOP position)

STOP position may not be in the middle, i.e. 50% / 50%

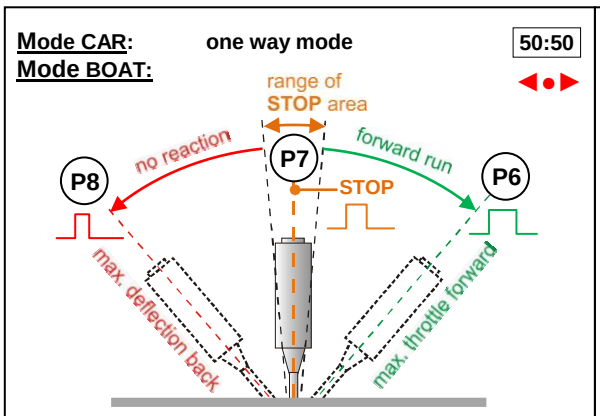

fig. 3

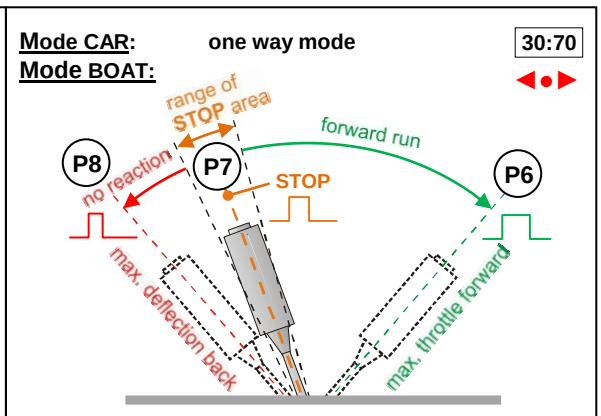

fig. 4

One-way Aircraft
brake in neutral (STOP) **can be** activated

One-way Boat
brake **cannot be** activated

Controller to the signal below the Neutral position (below P7, backwards signal) don´t react.

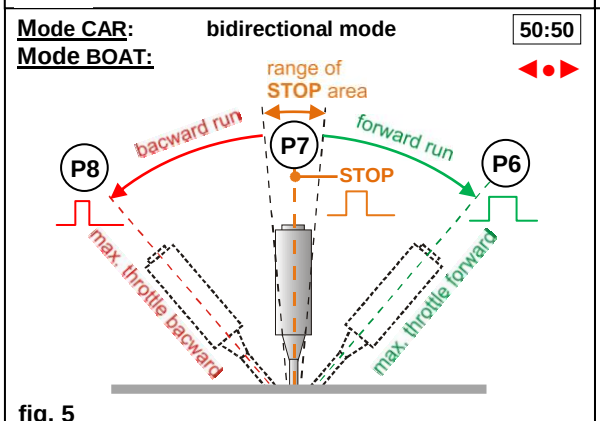

fig. 5

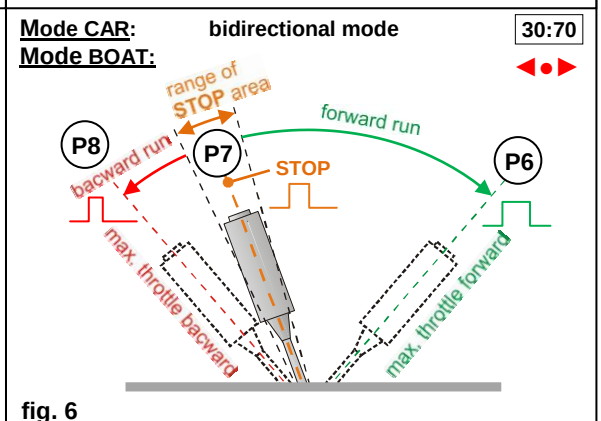

fig. 6

Aircraft bidirectional
brake in neutral (STOP) **can be** activated

Boat bidirectional
brake **cannot be** activated

When crossing the Neutral, controller goes smoothly from rotation in one direction to another direction.

Joystick with neutral (with lock the STOP position)

STOP position may not be in the middle, i.e. 50% / 50%

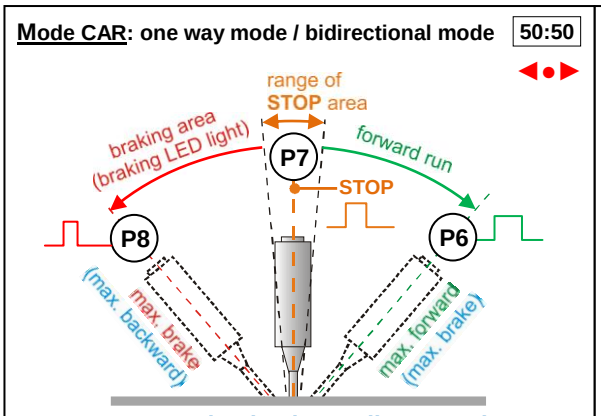

fig. 7 **For running back are all reversed**

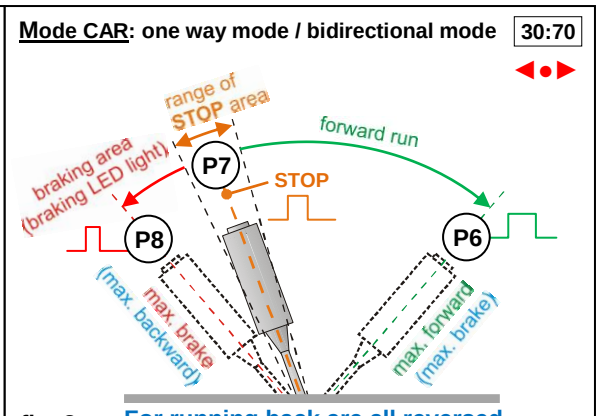

fig. 8 **For running back are all reversed**

Car bidirectional
brake and brake in neutral (STOP) **can be** activated

As you move the joystick forward from the STOP position (to P6), the motor rotates forward. If the joystick moves to the other side (to P8) and the motor still rotates forward, begins to brake. The braking intensity depends on the braking control signal.

If you move the joystick back from the STOP position (to P8), the motor rotates backwards. And brake when you move joystick forward (to P6).

The decision if braking or reverse, also affects the parameter P53.

Divided control BRAKE / THROTTLE

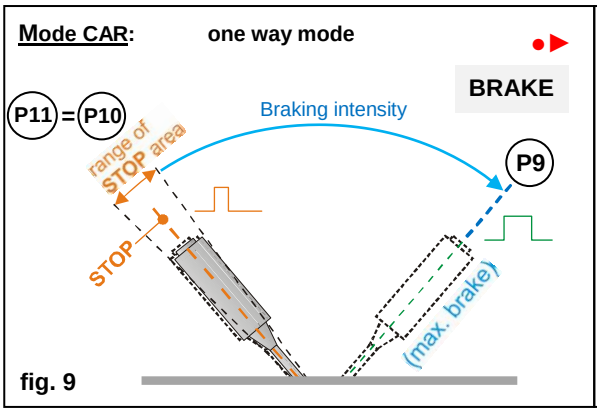

fig. 9

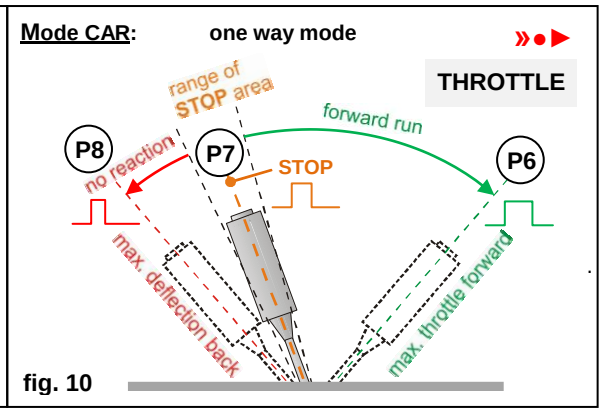

fig. 10

One-way Car
brake is on a separate channel

The throttle is controlled by the main control channel, brake by auxiliary. If the brake is activated (brake driver / activator is out of neutral, i.e. outside the STOP position), it is immediately ignored the signal from the throttle channel and the brake starts with the intensity of both set in parameter P22, both the value of the brake signal. If you stop braking, the motor is driven at speed (PWM output ...) by signal corresponding to the value of throttle signal. Location P7 and P8 on then throttle channel can coalesce to the same value (such as P10 and P1).

Memory select

Controller has 4 memory banks for storage parameters (for 4 different parameters setting).
Default values (company setting) in these memory banks is following: (you can any time come back to these values by button "**Default settings**"):

- memory #1 (model 1).... car bidirectional
- memory #2 (model 2).... boat bidirectional
- memory #3 (model 3).... aircraft one way
- memory #4 (model 4).... aircraft one way, const. rpm

From the production is pre-set select of memory #1

Nevertheless you can any time change settings of parameters in these memory banks, by your own request and needs.

Select memory bank in program ***Controller 2*** and write by button „**Write setting**" (available when change some parameter

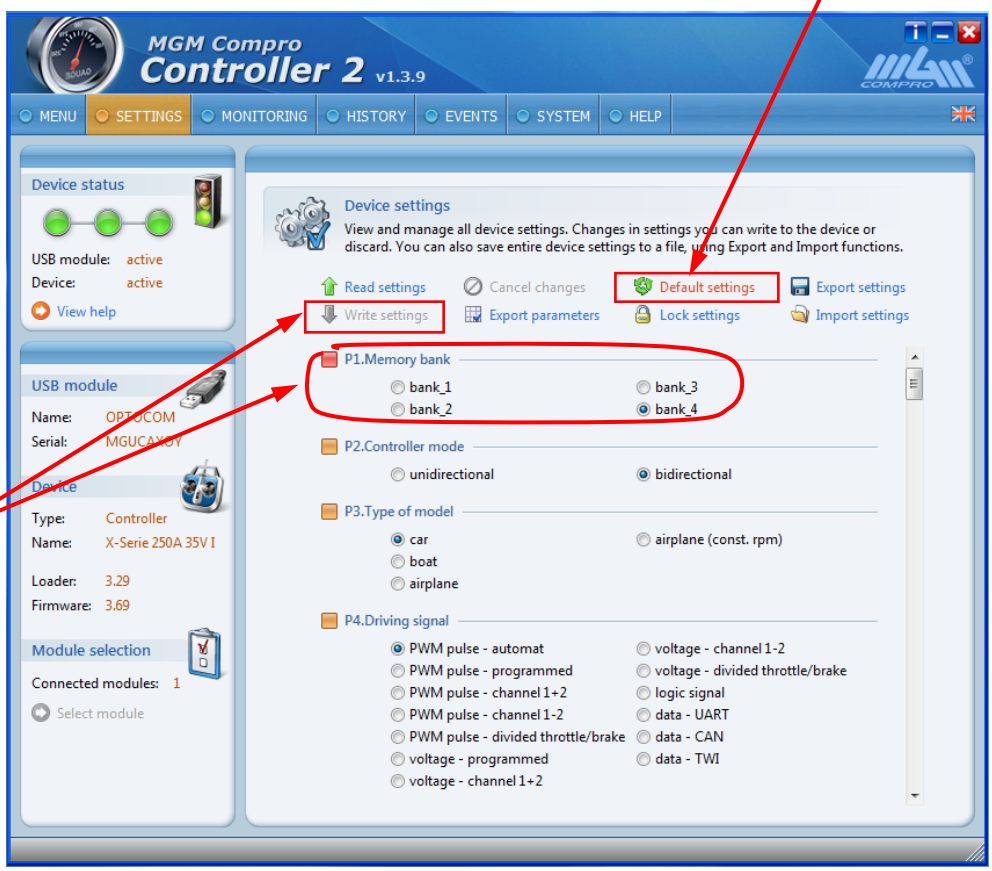

IMPORTANT:
Change of content of selected memory bank (i.e. parameters values) is possible make only by PC!
To change the "Default basic" to "Default advanced" (and vice versa) are set to all parameters default values !

When you want change some parameter(s), **necessary first select memory bank in program** „***Controller 2***" in which you want make changes. After this selection you can change all parameters by your needs and after pushing button "**Write setting**" will be these new values of changed parameters write to selected memory banks.
All changes of any parameter are related to selected memory bank.

Note: No possible make this process in reversal order, i.e. no possible change parameter first and after this select memory bank!

Programmable parameters

Parameters setting by user, including default values for all memory banks (type of driving):

parameter		range		step	Bank #1	Bank #2	Bank #3	Bank #4
					Default settings	Default settings	Default settings	Default settings
P1	**Memory bank**	1	4	H	Bank #1	Bank #2	Bank #3	Bank #4
P3	**Basic type of behavior**			H	**Car**	**Boat**	**Aircraft**	**Aircraft**
P2	**Direction mode**			H	Bidirectional	Bidirectional	One way	One way
P69	**Control type**			H	PWM	PWM	PWM	Constant rpm
P5	**Controller start behavior**				safe	safe	safe	safe
P4	**Control signal**			H	By HW configuration	By HW configuration	By HW configuration	By HW configuration
P33	**Control signal limits setting lock**			H	Allowed	Allowed	Allowed	Allowed
P90	**Signal limits monitoring**			H	Yes	Yes	Yes	Yes
	Control signal limits-main channel							
P6	**Full throttle Forward**	1,6 ms 0,15 V	2,3 ms 3,15 V	1µs 1mV	2,0 ms / 3,15 V	2,0 ms / 3,15 V	2,0 ms / 3,15 V	2,0 ms / 3,15 V
P7	**STOP / Neutral**	1,0 ms 0,15 V	1,7 ms 3,15 V	1µs 1mV	1,5 ms / 1,65 V	1,5 ms / 1,65 V	1,5 ms / 1,65 V	1,5 ms / 1,65 V
P8	**Full throttle Backward / (Full Brake)**	0,7 ms 0,15 V	1,4 ms 3,15 V	1µs 1mV	1,0 ms / 0,15 V	1,0 ms / 0,15 V	1,0 ms / 0,15 V	1,0 ms / 0,15 V
	Control signal limits – aux. channel							
P9	**Full throttle Forward / Full Brake** (for divided control BRAKE / THROTTLE)	1,6 ms 0,15 V	2,3 ms 3,15 V	1µs 1mV	2,0 ms / 3,15 V	2,0 ms / 3,15 V	2,0 ms / 3,15 V	2,0 ms / 3,15 V
P10	**STOP / Neutral**	1,0 ms 0,15 V	1,7 ms 3,15 V	1µs 1mV	1,5 ms / 1,65 V	1,5 ms / 1,65 V	1,5 ms / 1,65 V	1,5 ms / 1,65 V
P11	**Full throttle Backward / (Full Brake)**	0,7 ms 0,15 V	1,4 ms 3,15 V	1µs 1mV	1,0 ms / 0,15 V	1,0 ms / 0,15 V	1,0 ms / 0,15 V	1,0 ms / 0,15 V
P12	**Neutral throttle range** (STOP area)	5%	25%	1%	15%	15%	5%	5%
P13	**Throttle terminal points toleration**	1%	25%	1%	5%	5%	5%	5%
P41	**Enabling input (Gate)**			H	off	off	off	off
P53	**„Reversing or Brake“ Point**	0	100	1%	10	10	--	--
P42	**Controller feeding**			H	Automat 78%	Automat 78%	Automat 78%	Automat 78%
P43	**Number of cells**	1	250	1	1	1	1	1
P78	**Battery capacity**	0,1	250	0,1Ah	0,1	0,1	0,1	0,1
P44	**Switch-off voltage / cell** (for P42=UNI)	0,1V	63V	0,1V	0,1	0,1	0,1	0,1
P45	**"empty battery" behavior**			H	Power reduction	Power reduction	Power reduction	Power reduction
P77	**"empty battery" in advance warning** – alarm when **the voltage** drops below **:**	0,1V	63V	0,1V	0,1	0,1	0,1	0,1
P87	**"empty battery" in advance warning** – alarm when **battery charge** drops below **:**	0%	50%	1%	20%	20%	20%	20%
P72	**Max. power supply voltage**	1V	63V	1V	63	63	63	63
P19	**Max. current** (% of max. short time current)	10%	100%	1%	100%	100%	100%	100%
P20	**Power (PWM) limiting backward**	10%	100%	1%	100%	100%	--	--
P46	**Motor type** (+Automatic sensor settings)			H	Sensorless	Sensorless	Sensorless	Sensorless
P47	**Number of motor poles**	2	60	2	2	2	2	2
P51	**Motor PWM frequency**	8 kHz	32 kHz	H	8 kHz	8 kHz	8 kHz	8 kHz
P52	**Motor timing**	0°	30	1°	0°	0°	0°	0°
P83	**Minimal starting power**	0	100	1%	0	0	0	0
P54	**Motor basic spin direction**			H	correct	correct	correct	correct
P48	**Mechanical gear of the system X:1**	1	600.00	0.01	1.00	1.00	1.00	1.00
P49	**Wheel diameter**	1	1000	1mm				
P50	**System Rpm Limit** (on output shaft)	10	250.000	10	250.000	250.000	250.000	250.000
P86	**Motor Rpm Limit**	10	250.000	10	250.000	250.000	250.000	250.000

Table continues on the next page

Parameter Table continue

parameter		range		step	Bank #1	Bank #2	Bank #3	Bank #4
					Default settings	Default settings	Default settings	Default settings
P16	**Acceleration** (time from 0% to 100%)	0,1 sec.	60 sec.	0,1	0,5 sec.	0,5 sec.	0,5 sec.	0,5 sec.
P17	**Acceleration from STOP position** (only for constant rpm mode)	0,1 sec.	60 sec.	0,1	0,5 sec.	0,5 sec.	0,5 sec.	0,5 sec.
P82	**Cruise Control ramp**	0,1 sec.	60 sec.	0,1	0,5 sec.	0,5 sec.	0,5 sec.	0,5 sec.
P18	**Deceleration** (time from 100% to 0%)	0 sec.	60 sec.	0,1	0,5 sec	0,5 sec	0,5 sec	0,5 sec
P22	**Brake intensity**	0%	100%	1%	30%	--	--	--
P23	**Brake intensity in Neutral position (in STOP position)**	0%	100%	1%	0%	--	30%	30%
P25	**Brake Ramp** (time to reach full braking force)	0 sec.	60 sec.	0,1	0,2s	0,2s	0,2s	0,2s
P26	**Brake Ramp in Neutral** (time to reach full braking force)	0 sec.	60 sec.	0,1	0,2s	0,2s	0,2s	0,2s
P21	**Freewheel**			H	Yes	Yes	Yes	Yes
P38	**Control signal lost masking period**	0	60 sec.	10 ms	500 ms	500 ms	500 ms	500 ms
P39	**Brake intensity when signal is lost**	0	100	%	0	0	0	0
P71	**BB data-logging period / real-time Monitoring**	10 ms	100 ms	H	100 ms	100 ms	100 ms	100 ms
P85	**Parameters saved to BB, sets+**			H	basic	basic	basic	basic
P28	**Motor temperature sensor**			H	Not monitored	Not monitored	Not monitored	Not monitored
P29	**Battery temperature sensor**			H	Not monitored	Not monitored	Not monitored	Not monitored
P30	**Controller temperature limit**	25	110	°C	100°C	100°C	100°C	100°C
P31	**Motor temperature limit**	60	150	°C	90°C	90°C	90°C	90°C
P32	**Battery temperature limit**	40	70	°C	55°C	55°C	55°C	55°C
P37	**Calibration of motor temp. sensor**			Y/N	No	No	No	No
P36	**Calibration of battery temp. sensor**			Y/N	No	No	No	No
P88	**Throttle – allowed max. limit**	1000	3300	1mV	3200	3200	3200	3200
P89	**Throttle – allowed min. limit**	0	1500	1mV	100	100	100	100
P15	**Communication Address**	1	256	1	1	1	1	1
P14	**Telemetry**			H	off	off	off	off
P91	**Baud rate of RS 232 / 485**	10 Bd	1 MBd	1	38400	38400	38400	38400
P79	**Signal BL-1**			H	Braking lights	Indication of incoming discharge	Indication of incoming discharge	Indication of incoming discharge
P70	**Braking resistors control** (activation)			Y/N	No	No	No	No
P80	**Motor beeping** (on / off)			Y/N	Yes	Yes	Yes	Yes
P55	**PID regulátor - složka P**							
P56	**PID regulátor - složka I**							
P57	**PID regulátor - složka D**							

Legend: H - choice from discrete values

With respect to possibility of settings is necessary programming controllers **HBC-series** range only by PC with operating system Microsoft (**Windows XP**, **Vista** or **Windows 7**) and **USBCOM_4(i)** module with s cable **CC_11**. In your PC must be installed and run program „***Controller 2***“. Installation instruction is in manual „Installing and running of program Controller 2“.

Keep in mind default (company) settings of parameters represent only average values. These values are usable as “starting values” for starting of system (model) testing. In most cases will be necessary many parameters change and adapt for the best behavior of the controller - respectively of your model – by your images and requests.

Note: When your requests on parameter range or parameter type, or some other features, don´t realize these standard specification, contact ***MGM COMPRO*** company please.

Most of the above parameters is common to all types of controllers and the types of controls. Some specific parameters are for any type - except that it is always highlighted in the description of parameters. The settings are also dependent on the specific hardware of a particular type.

Description of all parameters

P1: Memory bank – memory choice (choice of pre-defined parameters)

This special parameter makes possible choice of one of four pre-defined settings. Default parameters are defined for these type of driving:

- `(Bank #1)car bidirectional`
- `(Bank #2)boat bidirectional`
- `(Bank #3)aircraft one way`
- `(Bank #4)aircraft one way, constant revolution`

Nevertheless you can change these parameters (in each memory bank) in any time by your request and needs, for example:

One way controller, voltage driving, constant rpm	(#1)
One way controller, voltage driving, constant torque	(#2)
Bidirectional controller, voltage driving, constant rpm	(#3)
Bidirectional controller, voltage driving, PWM control	(#4)

You can change all parameters by memory bank select, very quickly and easy. Choice of concrete memory bank you can make by program ***Controller 2*** or by transmitter (any time). Detail description you find in chapter „Memory select“ .

P3: Basic type of behavior

- `Car type`
- `Boat type`
- `Aircraft type`

Together with parameter „**P2**“ you set one way or bidirectional running for select type of model.
Together with parameter „**P69**“ you can set “constant revolution mode” or “constant torque”, not only PWM (speed control).

»●▶ Car one way mode:

Car (motor) may run only forward – when move throttle stick rearward (from neutral position), only brake is activate – car (motor) never run backward.

◀●▶ Car bidirectional mode:

The motor can rotate both directions, forwards and backwards (to one side or the other). If the motor stops, then move the joystick from the STOP position (neutral) to the direction of "forward" starts run forward or when movement of the joystick from the STOP position on the other hand, starts rotate back. If the motor is running already, then move the joystick to the opposite side (through neutral) begin to brake. The brake is proportional, i.e. the further the joystick from the neutral position, the brake is more intense. The intensity of the maximum braking position joystick, you can also set in parameter "**P22 - brake**". During braking, even after the car stops it will stay that way and will not start up in the opposite direction. Therefore, if you are braking and wish to move in the opposite direction, it is necessary, after stopping, to first move the throttle stick to neutral and then towards the desired direction. Then will the car move in the desired (opposite) direction (after moving the throttle from neutral forward/backward). Connected brake lights are lit up during braking.

X●▶ Boat one way mode:

The engine may run only forward – when move throttle stick backward (from neutral position), nothing happened, motor stop – no brake, no run.

◀●▶ Boat bidirectional mode:

The engine may run forward as well as backward. Transition from one direction to opposite, with speeds of deceleration and acceleration set in parameters „**P18 - deceleration**“ and „**P16 - acceleration**“. Function is symmetrical for both directions.

X●▶ Aircraft one way mode:

Throttle stick moving to forward motor start run. When moved to STOP position, motor stops and brake with preset intensity („**P23 – brake in Neutral (i.e. STOP) position**“) or only stops, without brake, when parameter set to **0**.

◀●▶ Aircraft bidirectional mode:

Similar to type "boat - bidirectional mode" with the difference that in the STOP position, the brake can be activated with a preset intensity ("**P23 - brake in position STOP**").

P2: Controller mode

- `One way` (engine operation is active only in one direction)
- `Bidirectional` (engine can active rotate in both directions)

P69: Control Type

- `direct PWM control of the motor`
- `constant rpm`
- `constant torque`

PWM control:

Linear relationship between driving signal and motor PWM.

Constant rpm:

Linear relationship between driving signal and constant motor rpm (by driving signal).
For details see chapter “Maximal revolution … Settings“.

Constant torque:

Linear relationship between driving signal and constant motor torque (0 – 100%). 100% value is **max. short time current** from table “Technical data“.

P5: Type of controller start

- `Safety start` (after turn-on controller is always wait for throttle (joystick) to the STOP position and search for external modules)
- `Fast start` (after turn-on controller is always wait for throttle (joystick) to the STOP position and don´t search for external modules)
- `Immediate start` (controller start immediately run motor by current throttle (driving signal) position, no wait for detection of the external modules on I2C)

P4: Control signal

Driving signal can be:

- input PWM (pulse width 1 ÷ 2 ms, period 3.5 ÷ 30 ms, signal pulse level 0 ÷ 3,3V or 0 ÷ 5V)
- voltage 0 up to +3,3V resp. 0 up to +5,0V (or other range)
- potentiometer 1kΩ (resp. 5kΩ or 10kΩ)
- logic signal, value 0 to +3,3V resp. 0 to +5,0V, read contact, etc.
- data transfer

Note: Main channel for control signal by input **PWM** is port „**INP_1**“, auxiliary port is „**INP_2**“
Main channel for control by **voltage** (or **potentiometer**) is port „**INP_2**“, auxiliary port is „**INP_1** “

I)

- PWM automat (throttle limits is necessary set for each turning on controller)
- PWM programmed (controller use saved learned throttle limits)

==========

II) (controller always remember throttle limits)

- PWM main channel (= input **INP_1)**
- PWM channel 1+2 (main channel + auxiliary channel)
- PWM channel 1-2 (main channel - auxiliary channel)
- PWM separate throttle / brake
- Voltage main channel (=input **INP_2)** (or potentiometer)
- Voltage channel 1+2 (main channel + auxiliary channel)
- Voltage channel 1-2 (main channel - auxiliary channel)
- Voltage, separate throttle / brake
- Logic signal
- Data transfer UART (RS-232)/(RS-485)
- Data transfer CAN
- Data transfer TWI

This parameter coheres with next parameters P6, P7 and P8 , resp. P9, P10 and P11.

I) In case **PWM automat** is advantageous because you do not have to set or program anything even when you change the transmitter setting (on channel throttle) or use different transmitter or receiver (driving signal). The disadvantage is that you have to show the controller the throttle limits after each turn on of the controller by moving the throttle forwards and backwards, respectively minimal and maximal throttle. In most cases is better when controller remember real throttle limits. Necessary set this parameter to “**PWM Programmed**” and learn real throttle limits by way description for next parameters (P6, P7, P8).

II) In case „**PWM main channel**“ and next parameters, (i.e. parameters **II),** under line **====**), is necessary directly set values for parameters P6, P7 a P8, resp. P9, P10 a P11 by program ***Controller 2.*** This way parameters set not possible change by some other method (as possible for parameters **I**). Controller remembered these values.

P33: Control signal limits setting lock (by signal source)

- forbidden – blocks of unwanted rewriting of throttle limits (blocks “learning” of these values)
- allowed – permits learning of throttle limits (rewriting of parameters P6, P7, P8) from signal source

P90: Monitoring limits for voltage control

Parameter off limits of the analog input voltage 0.15 V and 3.15 V - when above and below this value, the input voltage is evaluated as "out of range" (Prohibited area L). Related to monitoring of disconnection control signal / cut potentiometer. When set to "off" prohibited areas are disabled and deactivated and the input signal can be in the full range 0.0 to 3.3 V.

- off
- on

P6, P7, P8: Joystick limits, range of control signal – values for Main channel *(values in **µs** (microseconds) or **mV** (millivolts))*

- `Full throttle Forward` 100% (= 2.0ms for driving PWM or +3.3V (+5.0V / +10V) for driving voltage)
- `STOP (Neutral)` 0% (~ 1.5ms for driving PWM or ~1.65V (~2.5V resp. ~5.0V) for driving voltage)
- `Full throttle Backward` −100% (= 1.0ms for driving PWM or 0.0V for driving voltage) (= full break for forward run)

For correct controller reaction (by your image) is necessary unify throttle range (limits) of your transmitter (range of driving signal) with range throttle limits in your controller. **When you change the transmitter or the range of the throttle, or you change the receiver or change any signal source, you have to set the limits again.** This setting (unify) is possible make by these ways:

a) Controller learn real throttle limits directly from your control signal source, potentiometer, … by description in chapter „Throttle limits settings". This is valid only for first two possibilities of parameter **P4** (i.e. **parameters `I`**).

b) Set controller's throttle limits to concrete values by program ***Controller 2*** (or let set default values) – valid for **parameters `II`** only**. Subsequently you must** setup source of control signal (neutral position and endpoints) reconciled to the controller setting - with this step help you controller's indication LEDs – exactly show current throttle position.

P9, P10, P11: Joystick limits, range of control signal – values for Aux. channel *(values in **µs** (microseconds) or **mV** (millivolts))*

- `Full throttle Forward` 100% (Full Brake for "divided throttle / brake")
- `STOP (Neutral)` 0% (STOP)
- `Full throttle Backward` −100% (= full brake for forward run)

Set controller's throttle limits to concrete values by program ***Controller 2*** (or let set default values) – valid for **parameters `II`)** only**. Subsequently necessary c**hange transmitter throttle limits by transmitter settings or signal source setting (neutral position, end points of throttle stick) to controller settings – with this step help you controller's indication LEDs – exactly show current throttle position.

Note: In case your signal source (generator, transmitter, etc.) have exact and known values (pulse width or voltage), not necessary "match" controller settings (parameters P6 – P11) with generator's values, correct numeric settings is sufficient.
Attention, version with optical isolation of input PWM signal to the shift of the width input signal - in this case, it is preferable to the automatic learning of the control signal limits.

P12: Neutral throttle range (toleration of the STOP area position) *(value in %)*

This parameter is related to previous - this is an area which the controller evaluates as "STOP" (or "neutral"), i.e. the position of the joystick (potentiometer, level control voltage, ...) in which the motor is not rotating (stopped). Too narrow zone may not be reliably evaluated, too wide zone narrows the area of throttle regulation. With some types of transmitters (signal generators), loosening of throttle potentiometer occurs during operation, which causes different position of neutral for transitions from „throttle forward" and different from „throttle backward". This mechanical shortcoming must be eliminated by either setting a significantly higher value of this parameter or even better by fastening the fastening nut of the throttle potentiometer.
When you set too wide zone, all is working correctly, but lost part of regulation range → lower gentle of regulation step.
This setting is meaningful for analog driving signal (input PWM, voltage). In case of data transfer controlling this is not important.

P13: Control signal (throttle, joystick) limit range area *(value in %)*

Defines provision for terminal points settings for real driving signal. This setting is meaningful for analog driving signal (input PWM, voltage). In case of data transfer controlling this is not important.
Note: The graphical representation of these two parameters (P12, P13) is in parameter P83.

P41: Motor run Enabling input / Gate *(using port **TxD** as **GATE input**)*

If you need to start / stop motor run independently from the main control input and both control inputs and INP_1 INP_2 are used, you can use the serial port TxD lines connected in HW as input. This function is then activated by this parameter P41 instead of P4.

`Disable`	– non active function
`Turn-on – enable/blocking the motor run`	– engine is running with closed switch (safety input connected to GND) – motor run is blocked for open switch (contact)
`Turn-on – enable/blocking the motor run, inverse logic`	– engine is running with open switch (contact) – motor run is blocked for closed switch (safety input connected to GND)

For detail see chapter „Enabling engine running by logic signal (function B)".

P53: „Reversing – OR – Brake" Point (for cars type of control only) *(value in %)*

This parameter sets the moment, or rather the speed of rotation at which the joystick move to the other side (through neutral) no longer activate the brake, but goes directly to run in the opposite direction. It is a condition where the motor is almost (or totally) stopped and speed of the motor controller is evaluated as "stopped" - and can therefore go in the opposite direction to the rotation.

P42: Controller feeding (Type of cells / switching-off voltage)

Parameter set type of cells, include standard switch-off voltage. Monitoring each cell is possible select for some type of cells.
Also is possible set switch-off voltage as 78% of value in moment of connection battery.
Next possibility is selection of "universal cell" (UNI), when is possible set any value – this choice includes so much as type of cell, also cells which are not available in moment of controller production.

- `Unwatched battery voltage` – **ATTENTION**, with this setting you can damaged battery !!! (battery must be monitored by some external equipment)

- `Automat 78%` – switch-off / power reducing for voltage drop to 78% of value when connected battery
- `Lipol (3,2V)` – switch-off / power reducing for voltage drop to 3,2V / cell
- `Lipol, monitors each cell` – switch-off / power reducing for voltage drop to 3,2V / cell (necessary external module)
- `A123 (2,5V)` – switch-off / power reducing for voltage drop to 2,5V / cell
- `A123, monitors each cell` – switch-off / power reducing for voltage drop to 2,5V / cell (necessary external module)
- `Nixx (0,8V)` – switch-off / power reducing for voltage drop to 0,8V / cell
- `Pb (1,8V)` – switch-off / power reducing for voltage drop to 1,8V / cell
- `UNI universal value` – switch-off / power reducing for voltage drop to set value
- `UNI, monitors each cell` – switch-off / power reducing for voltage drop to set value (necessary external module except 25063 and 40063 controller)

- **`Power Supply`** – switch-off / power reducing for voltage drop to set value
  – **ATTENTION**, with this setting you must not braking (+must not switch-off freewheel) without connected and set braking resistors (with power switch) **!!! (controller these parameters automatically resize)**

Note:
78% Automat mode is useful if you often change the number or type of traction battery cells (you do not have rebuilt settings). The system to work correctly, it is necessary to **always start with a fully charged battery!** If this condition is not met, cannot be guaranteed correct disconnected motor end (turn-off) battery voltage - i.e. if you start with an already partially or fully discharged battery, can significantly over discharge cells and destroy them (mainly in the case of Lithium cells).

P43: Traction Battery Number of cells

Set used number of cells for **Lipol**, **A123**, **Nixx**, **Pb** and **UNI** battery.
Not operate for **Automat 78%** and **Not monitored** …. – in these two cases is parameter afield.

P78: Battery capacity *(value in Ah)*

This enables possibility watch, in real time, discharging main battery in the model by "back data transfer" via Telemetry – as "fuel tank indicator". It is also important to specify when using parameter **P87**, **Capacity countdown**.

P44: Switch-off voltage for UNI *(value in Volts)*

Set switch-off voltage for one cell for **UNI** battery**.**

P45: Behavior when battery is empty

- `Motor stop`
- `Motor stop with brake`
- `Power reduction`

When the voltage drops to a preset turn-off value can be set either by a gradual reduction in power or off (with the possibility of a new turned on after moving the joystick to the STOP position if the battery is a little "recover" and its voltage rises again).

P77: "Empty battery" in advance warning by voltage (alarm when battery voltage drops below that …) *(value in Volt – overall voltage)*

Defines the total battery voltage, which is activated when an external indication to connector **ICS-2**, the signal **BL_1**. Appropriate setting can be done that the notice of impending battery will get well in advance. Please, respect real discharging curves (characteristics) for used battery.

TMM® controllers *MGM COMPRO* – early warning indication

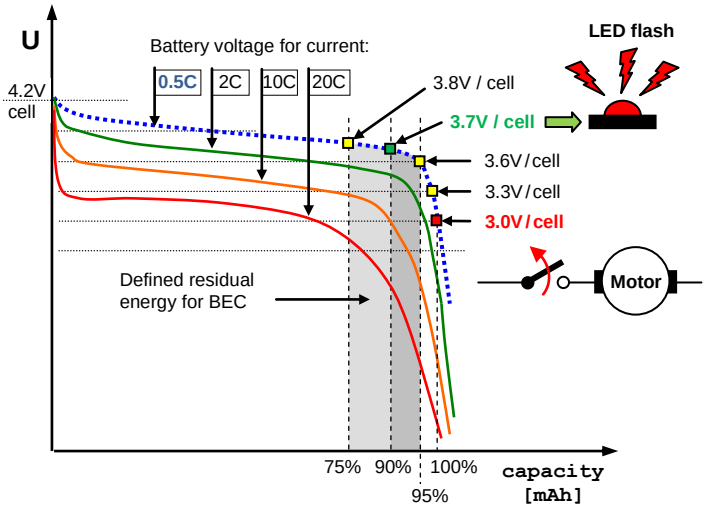

Switching-off voltage set to safety value corresponding with choice battery type (parameter P42, P43, P44) – example on the picture have set 3.0 V/ cell for Lipol, red point on blue dotted discharging curve (starting value for motor power limitation).

Early warning voltage set to corresponding value with requested residual energy – example on picture have set **3.7 V/ cell**, green point on blue dotted discharging curve. Please, always respect discharging characteristics of used battery, see to values on battery producer datasheet. Always use discharging curve for lower current (lowest "C" rate), blue dotted curve for example on the picture. Residual energy is in this sample ca 10%.

In regard of unique feature of ***MGM COMPRO*** controllers (recalculation of terminal battery voltage to its internal voltage), is this voltage (≈ residual energy) almost independent on internal battery resistance as well as on real battery discharging current, see „Protective and safety mechanism ….".

We recommend this set voltage (≈ residual energy) check by one discharging cycle on the ground (not during real flight) and verify real value of residual energy, and eventually make little correction by real result.

Profitable can be association with each cell monitoring, by possibility of setting of parameter ***P42, Controller feeding.***

Note: Some types of batteries (such as A123 or LiFePO4) have extremely flat discharge curve for most of the time of discharge or even negative (end voltage increases). In these cases, early-warning mechanism does not work and can not be used - must use the "**Capacity Countdown**" parameter **P87**.

P87: "Empty battery" in advance warning by charge (alarm when battery charge drops below that …)
(value specified in% of battery capacity specify in P78)

In some cases it is preferable to monitor the quantity of residual battery energy by integration of discharging current. The system alerts to residual amount of fuel (energy in the battery) when reach the set value of the residual capacity in %. When drop bellow set value, indicates that both the controller status output **BL_1** (ICS-2 connector, pin 1) and by providing this information to the connected displays and/or display units. If you do not monitor the state of discharging, enter 0%.
Because the battery capacity varies depending to discharging current and also integration of current consumption is not perfectly accurate, we recommend the set of experimentally verified and corrected by the actual results.

P72: Max. power supply voltage *(value in Volts)*
Set max. voltage for choice type „**Power Supply**". When voltage exceed this set value, external braking resistor is activated (activates the control signal for turned on power electronic braking resistors).

P19: Maximal allowed current (limited) ***(calculated from the <u>maximum short-time current</u> of the controller**, the value in%)*
This parameter set top value of average motor current (in all cases equal or smaller than nominal controller current). Parameter is defined as % from max. short-time current. **Apply for both directions. Acceleration current peaks are tolerated**. (**P19=100% is without reduction**).

P20: Maximal power Backward – additional motor PWM limiting to rotate in "backward" direction *(% PWM)*
Reducing engine power when turning back is an additional limitation of the maximum motor PWM to the set value.
The value is specified as a percentage PWM. (**P20=100% = without limitation of the motor PWM backward)**
Overall, therefore, backward power limited both by restricting maximum current (P19), and motor PWM limitations, regardless of the current.
Applies the effect (the phenomenon), which occurs first.

Example: for controller **10063** is nominal (=continuous, without time limits) current 100A, **short-time current is 140A**
P19 = 60%, i.e. current will be reduced to **60% from 140A**, i.e. **to 98A** (value is valid for both direction of motor rotation)
P20 = 50%, i.e. power backward (resp. motor PWM backward) will be reduced to 50% of PWM, if previously does not apply current limitation (P19)
P20 = 100 i.e. current backward will be not additionally reduced (i.e. in this example, for P19=70%, this is 98A).

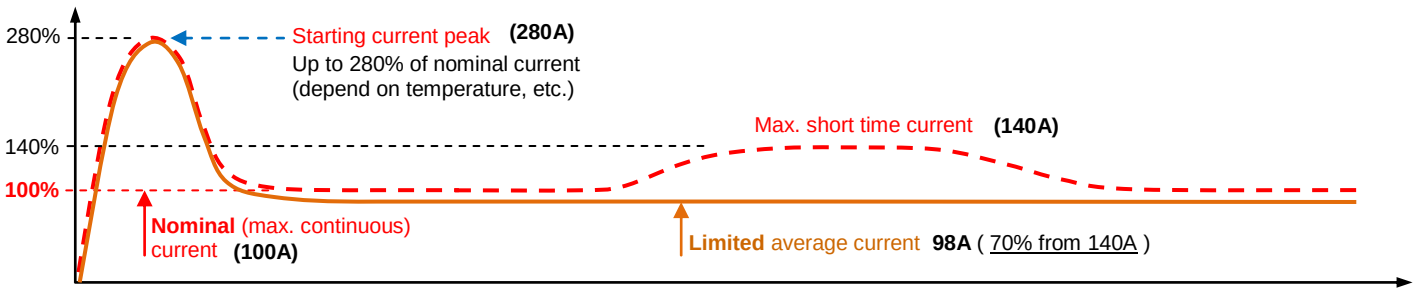

P46: Motor type + Automatic sensor settings

- Sensorless
- Sensors
- Sensors – Automatic sensors settings

Possible is set sensorless as well as sensor motor (SE version only).
Next possibility is „**Automatic sensors settings**" include optimization of sensors position. We recommend make this setting first in case of sensor motor. Partly you eliminate problems with no correct phase and sensors connection, partly you optimize sensors position – this is, at least, very recommendation, therefore sensor can be up to 20°out of optimize position inside some motors (and these not optimal position caused worse efficiency).
Procedure of this setting is described in details in chapter „Automatic sensors settings procedure".

P47: Number of motor poles
This parameter is important for correct computing of mechanical output wheel rpm of the motor. When connect mechanical gear, necessary set also gear ratio in parameter **P48** – necessary for example for helicopters. Without this value is not possible determine correct rpm. Also, if you need to stabilize or reduce engine speed (rpm), parameters **P50**, **P86**, you must specify this parameter correctly

P51: Motor PWM frequency

- Automat
- 8 kHz
- 10 kHz
- 12 kHz
- 14 kHz
- 16 kHz
- 24 kHz
- 32 kHz

Using this parameter you set suitable frequency for motor control (PWM).
If you have a regular motor, set the lower frequency (8 - 12 kHz). If your motor requires higher frequency (ironless motors with extreme low inductance), set the corresponding value (for example Tango by Kontronik need 32kHz, no recommend use lower value, etc.). Higher frequency of motor control means higher switching losses of the controller and the controller is heated up more. This leads to higher cooling demands; eventually it is also necessary to proportionally reduce maximal power (current) of the controller.
Next occasion for higher frequency select (for example 24 kHz) can be audible whistling of some motors under runs.

P52: Motor timing *(value in ° (angle in degrees))*

Automatic timing or 0° is recommended settings for most of the motors. We recommend this setting also in cases when motor producers recommend some concrete angel, for example 10° (this is necessary for some other controllers, not MGM compro).
Automatic timing cannot be the best for some sensorless motors working on the border of its power possibility – they can lose synchronization. In these cases is possible set higher timing 10 ÷ 25°, this can little bit help. However, in these cases, better is used another motor or sensor version of choice motor.

P83: Minimal starting power

Most of the BLDC and similar motors needs some minimum power to overcome the forces that magnets attract (hold) the rotor to the stator pole bits. If power supplied to the engine is too small (small movement of joystick, a small control voltage, ...), the engine does not exceed these forces and cannot spin, just vibrates (jerk) here and there.
By setting suitable value for this parameter is eliminated area of insufficient power and to the engine is supplied minimum power needed to spin. You will avoid engine vibration here and there in the smallest output. For the higher supplied power (according to the control signal), this parameter also does not apply (is not significant).

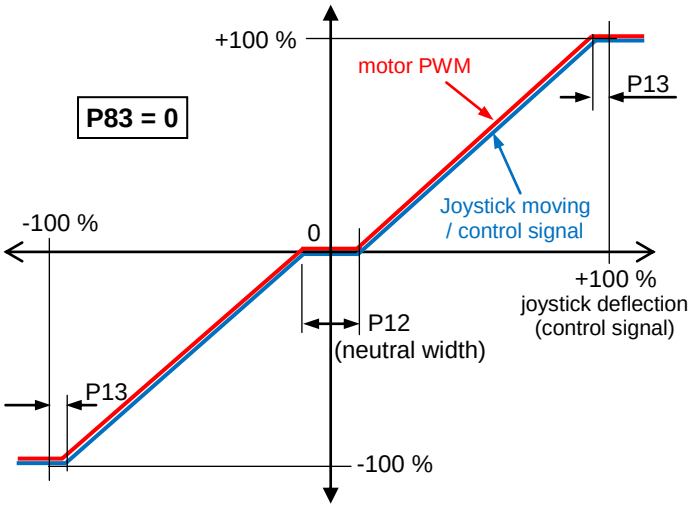

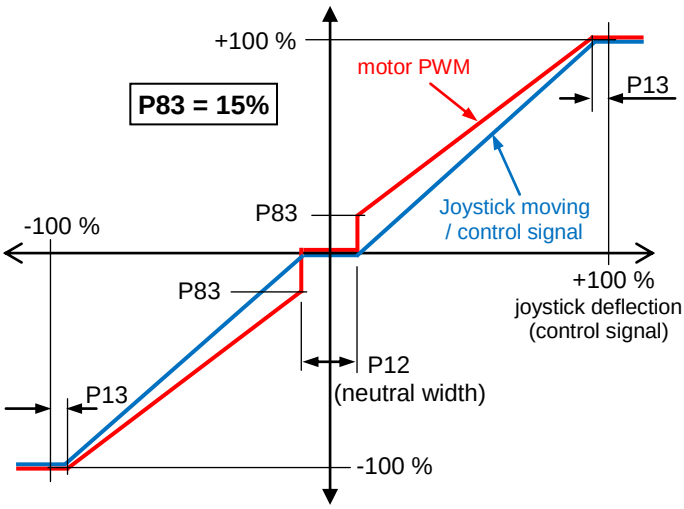

P54: Motor basic spin direction (basic direction of rotation)

- `Correct`
- `Please reverse`
- `By Logic signal` (basic revolution direction is possible change by logic signal on inputs, standard is used port RxD)

This parameters sets the desired direction of motor revolutions without having to swap two motor cables, when the motor is turning the other way. The same effect as swapping of two motor cables (cables swapping is possible only for sensorless motors).

P48: Mechanical gear of the system (overall)

Specifies overall gear ratio of 1: X between the engine output shaft and a mechanical output device (i.e. "for transmission). It is important to correct set (limitation) of the actual mechanical speed of mechanical system, parameter **P50**.

P50: System rpm limit, for gearbox output shaft *(value in rpm)*

This parameter allows to monitor (and not to exceed) the maximum speed of mechanical devices (e.g. propeller, etc.). This is a protection against mechanics damage by too much speed (rpm). The value of the maximum speed can be entered numerically in the program "**Controller 2**" and is described in detail in the chapter "Maximal revolution of the output shaft Settings".
In any combination of the output shaft speed, transmission ratio and the number of poles can not revolutions the engine (as defined for 2-pole of 250.000 rpm) exceed this value.

P86: Motor rpm limit *(value in rpm)*

This parameter allows to monitor (and not to exceed) the maximum revolutions of the motor shaft (motor protection).

P16: Acceleration, increasing of the power (rpm), time from 0% power to 100% *(values in milliseconds)*
Sets the time (speed) stopped the engine acceleration from 0 to 100% power. Apply in proportion anytime between any levels.

P18: Deceleration, decreasing of the power (rpm), time from 100% power to 0 *(values in milliseconds)*
Time necessary for decrease rpm from full value to zero (from 100% to 0) when move throttle (joystick) from full throttle position to STOP. This is important mainly when going from full throttle forward to full throttle backwards (and vice-versa). That is, motor decelerates to zero with the set speed and then accelerates to the other direction with the speed set in parameter " **P16**" - acceleration.
If **Freewheel** parameter („**P21**") is set, deceleration is not so strong.

Acceleration / deceleration (without freewheel):

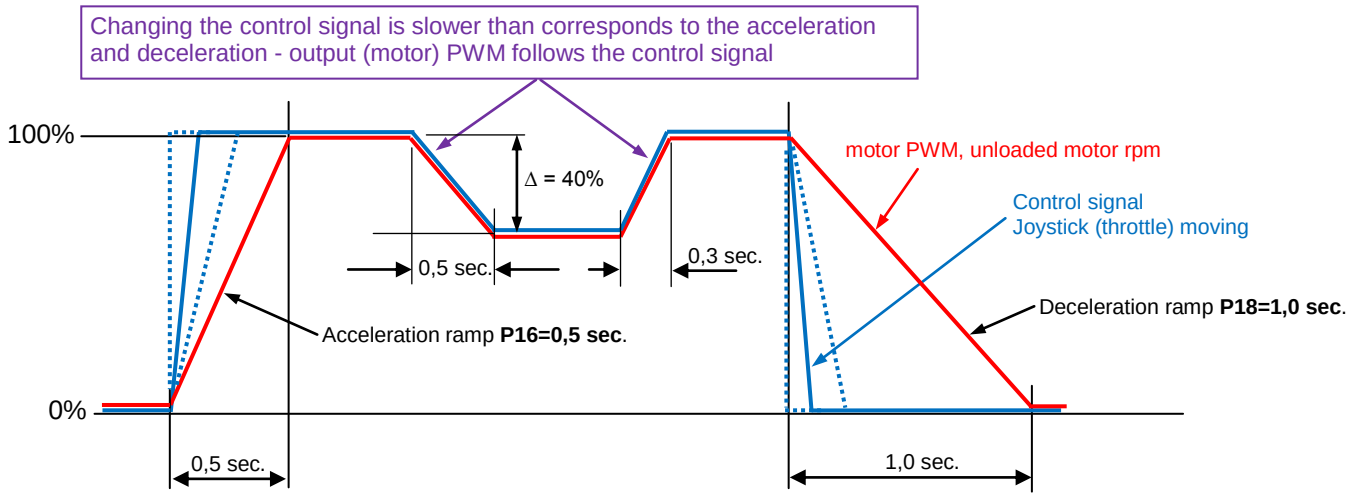

Acceleration / deceleration (without freewheel), control type: boat bidirectional:

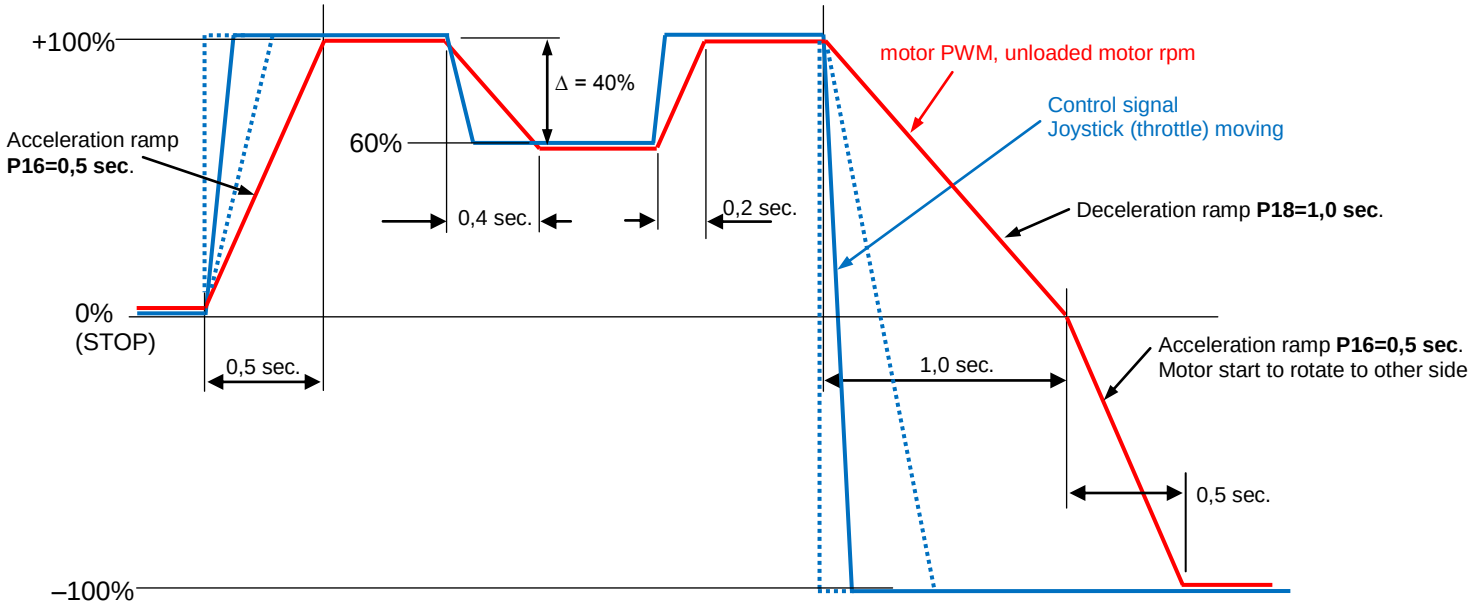

P17: Acceleration from STOP position, RPM rise time from 0% to 100% - only for the "constant speed" mode *(in milliseconds)*
The function can be activated only for constant speed mode. This function is useful if you need to accelerate greater inertia of a complete stop slower, but if the engine is running, it can accelerate / decelerate faster.
Set the time (speed) acceleration of the stopped motor from 0 to 100% power. This acceleration is valid only for start from STOP position to achieve value of the control signal. When reaching the stabilization RPM, acceleration ramp switches to value defined in parameter P16, which remains to stop the engine (up to transition of the control signal to STOP position) – then reactivates P17 value.
If you do not use this function, set the value equal to or less than P16.

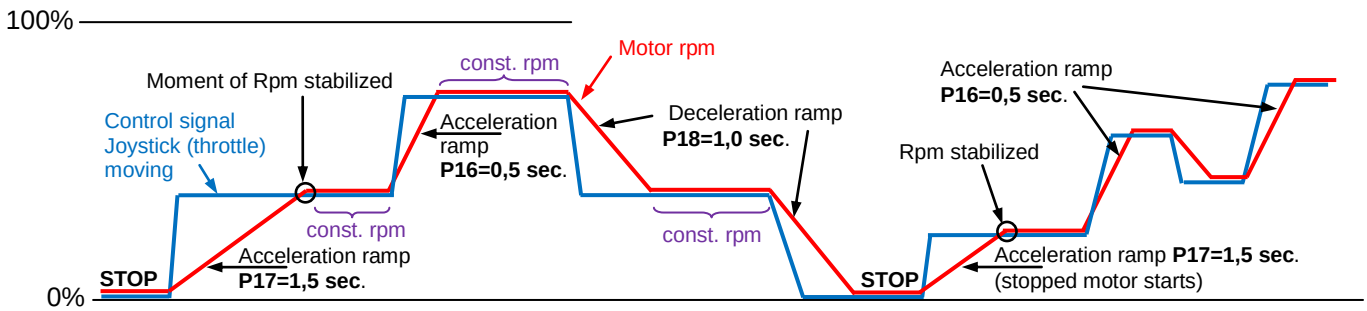

P82: Cruise controls Ramp *(values in seconds)*
Sets the rate of reaction speed at which the cruise control tries to maintain a set speed.

P22: Brake intensity (for car control type only) *(value in %)*
Function enables to set the maximal force of proportional brake in the maximal deflection of the joystick (braking intensity) + possibility "no brake" (suitable for systems with mechanical brake). Set according to your needs. If you wish automatically brake also in neutral, set parameter „**P23**", Brake in Neutral. Function is symmetrical for both directions.

P23: Brake intensity in Neutral (in STOP) position (for Cars and Aircrafts type only) *(value in %)*

Car - If you wish to automatically brake when the throttle stick is in Neutral position (STOP position), you may set the intensity of braking. If you do not wish to brake when in Neutral, set „0" to this parameter (do not brake when STOP position).
Increase braking force is possible any time by moving throttle stick (by change driving signal) to opposite direction (to max. brake position by **P22 setting**).

Aircraft - Parameter set braking intensity in STOP position of the throttle + not brake possibility. There is no **Brake** available (P22), position P7 and P8 joystick align in one)

Boat - This type of control does not the ability to set the brake, respectively. setting of this parameter is ineffective, for these types of brake controls is not sense.

P25: Brake Ramp (time to reach full braking force) *(value in milliseconds)*
Define speed of activation of braking (speed of "actuate brake pedal").

P26: Brake Ramp in Neutral (time to reach full braking force) *(value in milliseconds)*
Define speed of activation of automatic braking in Neutral position (in STOP position).

P21: Freewheel

- `No` (freewheel OFF, no active, synchronous rectification mode ON)
- `Yes` (freewheel ON, with synchronous rectification mode ON)
- `Yes, (no synchro)` (freewheel ON, without synchronous rectification)

Operation **with turned off freewheel** can be compared to a normal car with gear shifting. If you move throttle down, the engine brake active to new position of the throttle. The more you move throttle down, the more braking intensity. If you move the joystick (throttle) to neutral, the engine is braking (or stopped) very intensive. The engine basically follows (copies) of the control signal (joystick).

If the **freewheel is on**, every time the throttle move to a lower value (of course, also to neutral) the engine is disconnected (and don´t braking) up until the engine inertia slows down the speed corresponding to the new joystick position. Then again, the engine is powered. It is actually electronic equivalent of mechanical freewheel.

In the case of **freewheel without synchro** behavior is similar to that in the case of "freewheel is on." The difference is that transitions between connecting / disconnecting the engine can be smoother in some configurations, but efficiency of the controller is little bit worse.

Run without freewheel

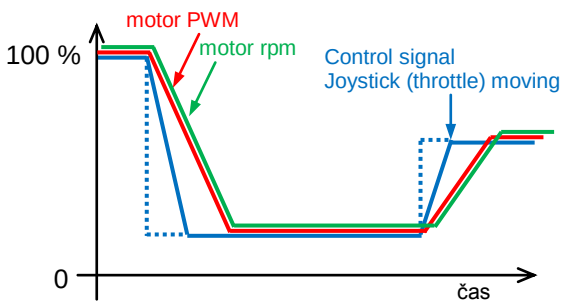

Run with freewheel

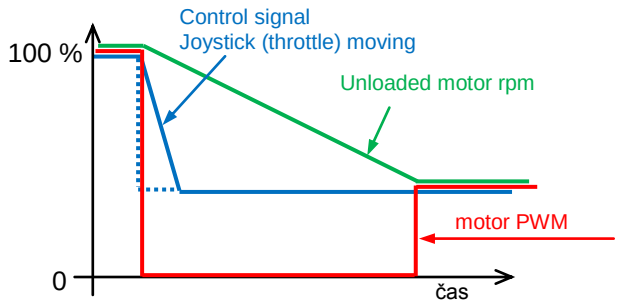

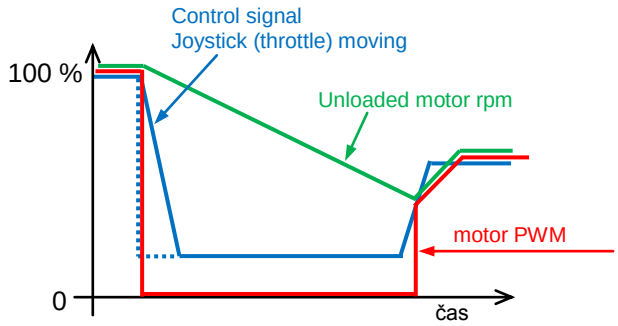

Freewheel and Brake, control type Car bidirectional, freewheel active:

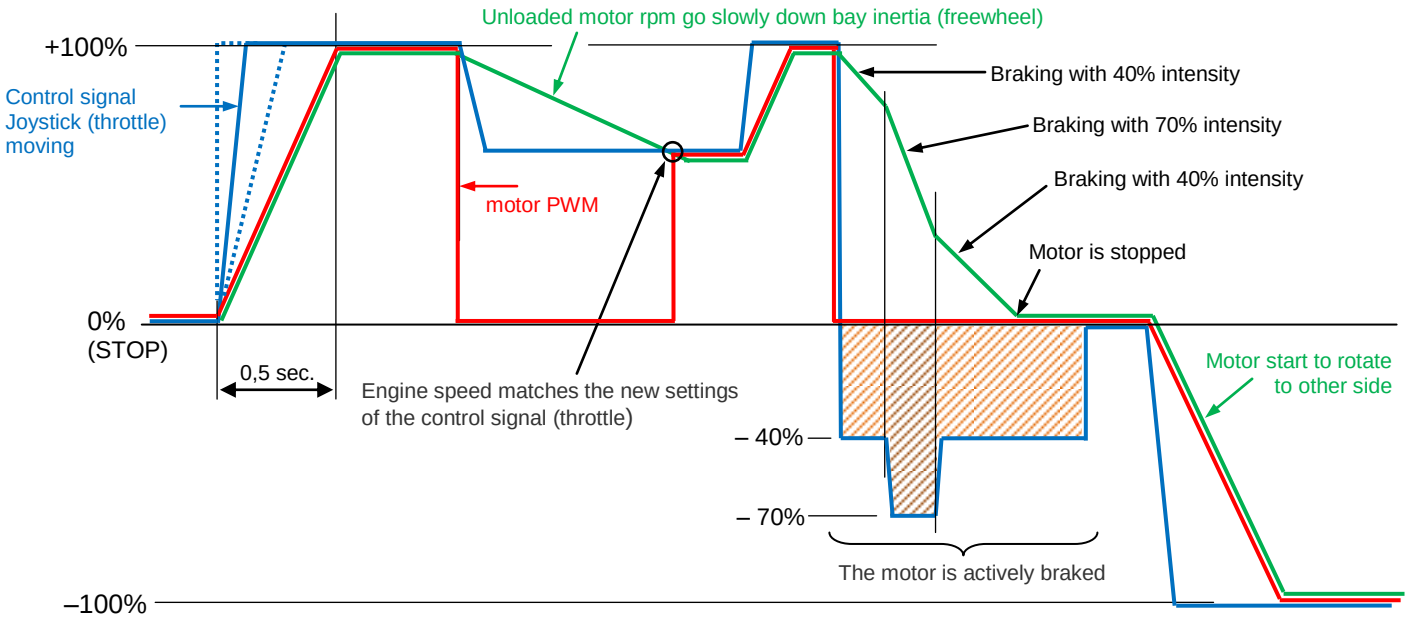

Freewheel, Brake and Brake in Nedutral, control type Car bidirectional, freewheel active:

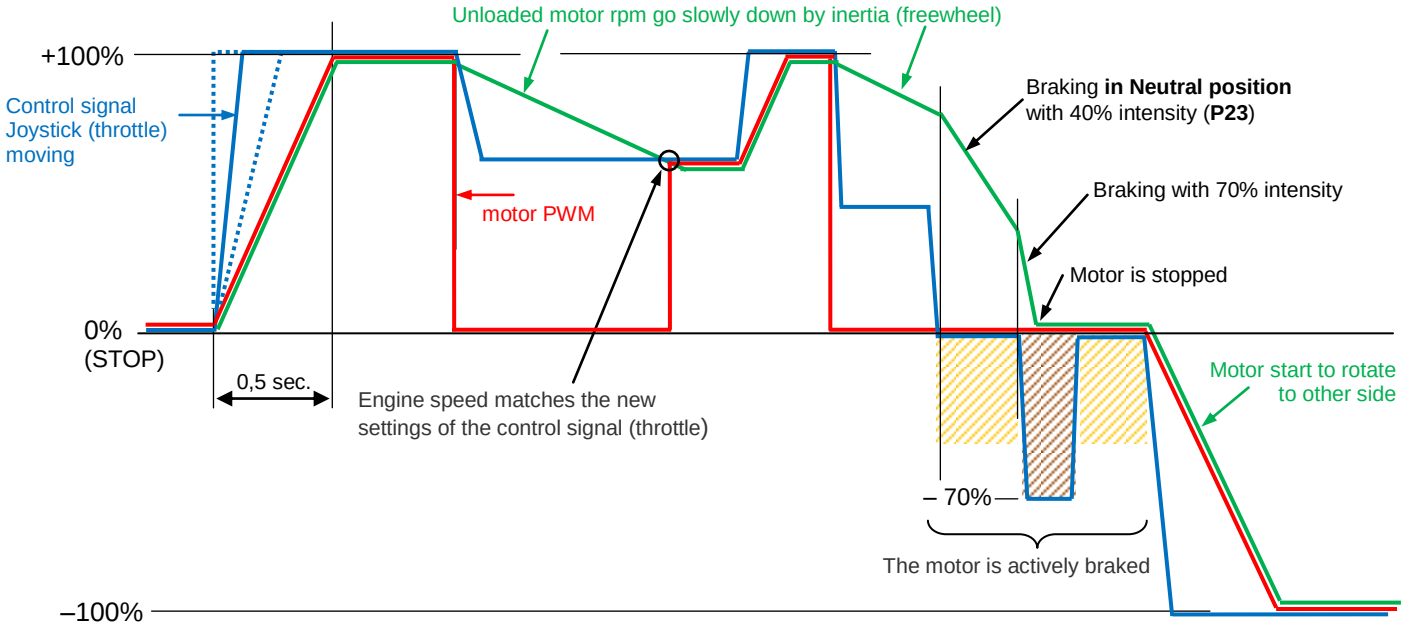

P38: Control signal lost masking time *(values in milliseconds)*
Masking of short driving signal lost. Parameter defines time for which is mask signal lost and keep last correct value of throttle position (i.e. also power value). After the lapse of this time controller start reduce power (motor rpm), with or without brake. Intensity of braking in this situation is set in next parameter **P39**.

P39: Brake intensity when signal is lost *(value in %)*
Set brake intensity when lost driving signal, after adjusted masking time (P38) from 0% (not brake) to 100% of max. brake.

P71: BB data logging period (Internal BlackBox record period) **/ real time Monitoring**

The standard write speed is 100 ms. With this rhythms are stored in the memory averaged measured values. Recording time is about 12 minutes. If you want to write faster (each 10 ms), averaging is faster (fewer samples), rapid of the details are better drawn, but recording time is 10 times shorter. You can select a record from the beginning or end (last 12 minutes).

You can also data record into the BB off and on "Monitoring", i.e., displaying data in real time on the PC screen via module USBCOM 4(i).

- `10 ms  record from start`
- **`100 ms`** `record from start`
- `100 ms from end  record of last 12 minutes`
- `BlackBox off, Monitoring in real time enabled`

To internal BlackBox (data logger) are saved different data, for details see chapter "Internal Black Box".

Start of the record:
Joystick moving (control signal) from the STOP position after controller is turned-on

Record Stop:
(controller turned-off)

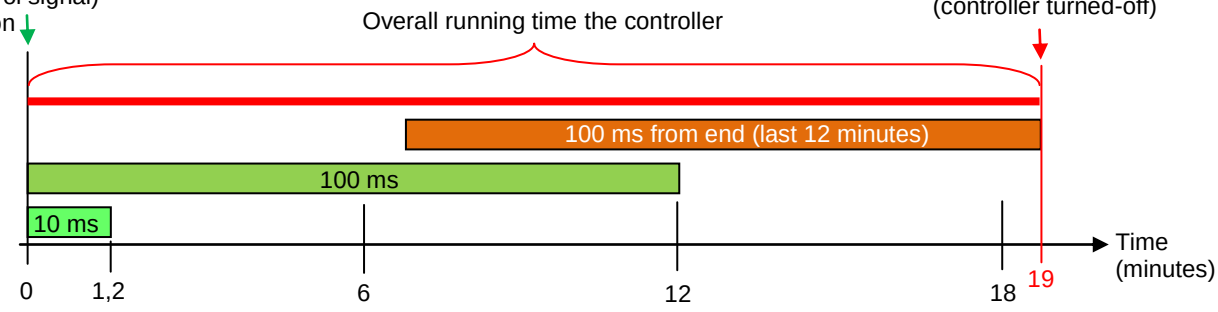

P85: Parameters stored to the BlackBox, sets

- `Basic set`
- `alternate 1 set`

As the number of values stored into the internal BlackBox is limited, you can choose (select) some measured values to be stored (at the expense of others). Which it will, this parameter specifies. Stored values are defined here: "The data stored in the record .... "

P28: Motor temperature sensor

Available for sensor motors only.

- `off`
- `Si diode`
- `10k NTC (by EFRA recommendation)`
- **`KTY81-210`**
- `KTY84-151`

When sensor is not connected, set "off ".

P29: Battery temperature sensor

If your controller may measure battery temperature (only OPTO versions), is possible set sensor type:

- `off`
- `Si diode`
- `10k NTC`
- **`KTY81-210`**
- `KTY84-151`

When sensor is not connected, set "off "

P30: Controller temperature limit *(value in °C)*

If for any reason you need to reduce the maximum temperature limit of the controller, enter demand value to this parameter.

P31: Motor temperature limit *(value in °C)*

If your controller may measure motor temperature (only sensor motor types, marked SE) and you have connect some of defined sensors, you can set temperature value for which is motor switch-off.

P32: Battery temperature limit *(value in °C)*

If your controller may measure battery temperature and you have connect some of defined sensors, you can set temperature value for which is motor switch-off.

P37: Calibration of the motor temperature sensor *(value in °C)*

For easy replacement of the temperature sensor you can make its calibration at any time. If you specify this parameter in the current ambient temperature in which the sensor is calibrated (of course after stabilization of temperature), write them into the controller and turn-off and back turn-on the controller. If everything went correctly, the controller after this normally works and you can normally run, drive, etc. with calibrated temperature sensor. In case some problem occurs, the situation is indicates on the LEDs.

Can be combined with other parameter settings, i.e. including the present motor temperature sensor calibration can be calibrated the battery temperature sensor, see parameter P36.

Caution - for each memory bank be made separately (possible advantage of different sensors for different settings).

P36: Calibration of the battery temperature sensor *(value in °C)*

For easy replacement of the temperature sensor you can make its calibration at any time. If you specify this parameter in the current ambient temperature in which the sensor is calibrated (of course after stabilization of temperature), write them into the controller and turn-off and back turn-on the controller. If everything went correctly, the controller after this normally works and you can normally run, drive, etc. with calibrated temperature sensor. In case some problem occurs, the situation is indicates on the LEDs.
Can be combined with other parameter settings, i.e. including the present battery temperature sensor calibration can be calibrated the motor temperature sensor, see parameter P37.
Caution - for each memory bank be made separately (possible advantage of different sensors for different settings).

P15: Communication address

Defines controller address for bus (RS 485, CAN, I2C) communication. This address must be different from other bus addresses.

P14: Telemetry

`Telemetry protocol definition`

- `off`
- `MZK service`
- `Graupner HoTT`

P91: Baud rate of RS 232 ~~/ 485~~

Communication speed can be set in the range of 10 Bd to 1MBd . Speed is entered directly numerically in baud rate, I.e. 38400 for the standard rate of 38,400 baud or 9600 for 9600 baud, etc..
For optically isolated RS 232 TTL speed limit applies to a maximum of 2400 baud. If the line is not optically isolated, restrictions don´t apply.

P79: Signal BL-1

This output signal can be assigned to the several possibilities:

- `Signaling approaching battery discharge / brake lights !!!!!!`
- `Continuous light`
- `Continuous Flashing`
- `Output "the speed signal"`

Signal (pulse) is active in log.1 (+3.3 V). For the “output speed” is generate **1 pulse / 1 electric revolution**

P70: Braking resistors control (activation) *(on - off)*

In case of need braking when controller feeding is from power supply (not from battery), must be connected braking resistors and corresponding power switch. Driving this switch implement this parameter. In active state (= need power switch ON) diving output is +3.3V. In most cases is power switching element realized as correct designed power MOSFET with driver. Is not allowed freewheel off and not allowed to use the freewheel with synchro.

P80: Motor beeping *(value yes / no)*

In case that acoustic indication by the engine is unwanted, beep can be disabled by this parameter.

- `off`
- **`on`**

P55: PID regulator – part P *(xxx)*

You can set component **P** by this parameter and significantly influence the behavior of the PID controller.

P56: PID regulator – part I *(xxx)*

You can set component **I** by this parameter and significantly influence the behavior of the PID controller.

P57: PID regulator – part D *(xxx)*

You can set component **D** by this parameter and significantly influence the behavior of the PID controller.

Parameters setting / Data reading from controller

To set parameters or reading data from the controller, you need to connect your PC and the controller module **USBCOM 4** or **USBCOM 4i** (for the controller feeding from the mains power supply), the PC software "***Controller 2***", which is free to download from our web and on CD and need connecting cable **CC_11**.

.

1) start program ***Controller 2***
2) connect **USBCOM 4(i)** module to USB port of your PC and connect with controller by **CC_11** cable (cable **CC_11** is connected to **ICS-2** marking connectors, in both equipment)
3) turn on controller by connect to suitable battery (and turn-on switch for version with switch)
4) now you can communicate with controller, read data, change parameters value, write changes parameters etc.

Don´t forget select memory bank first, change parameters after this. Before switch-off write parameters by button "**Write setting**.

Important: If the controller is feed from the battery, module **USBCOM 4** is enough to connect of the controller to the PC. But if you need use power supply for feeding the controller, you must use module **USBCOM 4i**, which ensure galvanic isolation of the controller from the PC. This is necessary because a number of mains power supply (either in PC or others) is not fully correct separated from their chassis (minus their potentials, GND) and is possible measured frequently large voltage (units to tens of volts). If you apply in this case USBCOM 4 non-insulated module, you risk damaging or destruction as USBCOM 4 module, as well as also the controller (or USB port on your PC).

Program Window in the PC screen:

Locks of parameters

If you need for parameters that you set (only some or even all) the user could not change value for any reason, you can use a system of locks parameters. If the window "**Settings**" click on "**Lock settings**", you open the window where you can choose which parameter remains open and which not.

Mark all the parameters you want locked against overwriting (here P1, P2, P3 and P4), enter " **Lock code** " and select "**Write settings**"".

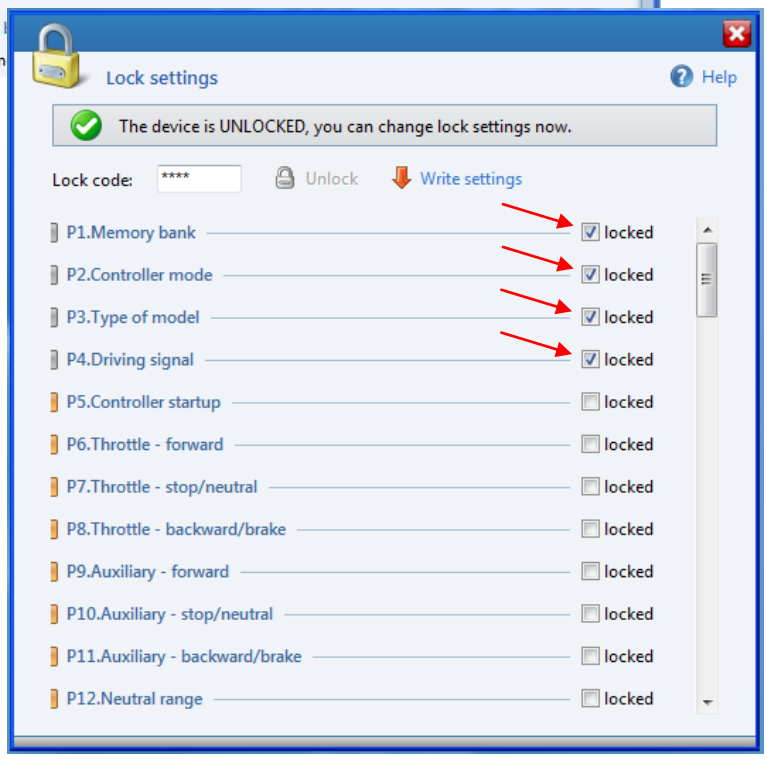

From this point are so selected parameters accessible (i.e. can be change their value) only if you write correct code.

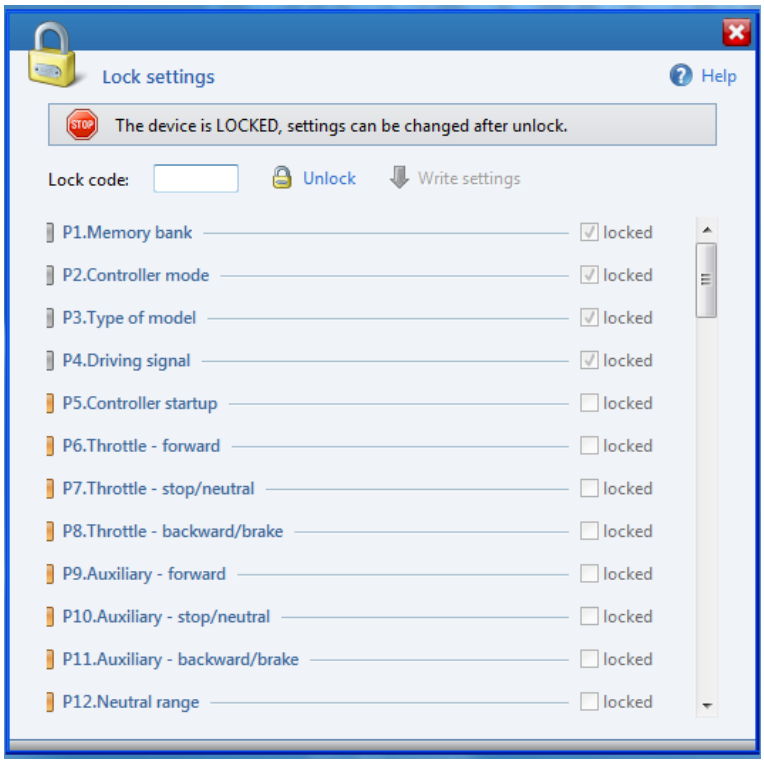

Locked parameters are displayed, but they cannot be changed (up to unlock using the correct code).
Locked parameters have gray box before the number parameter for easy orientation:

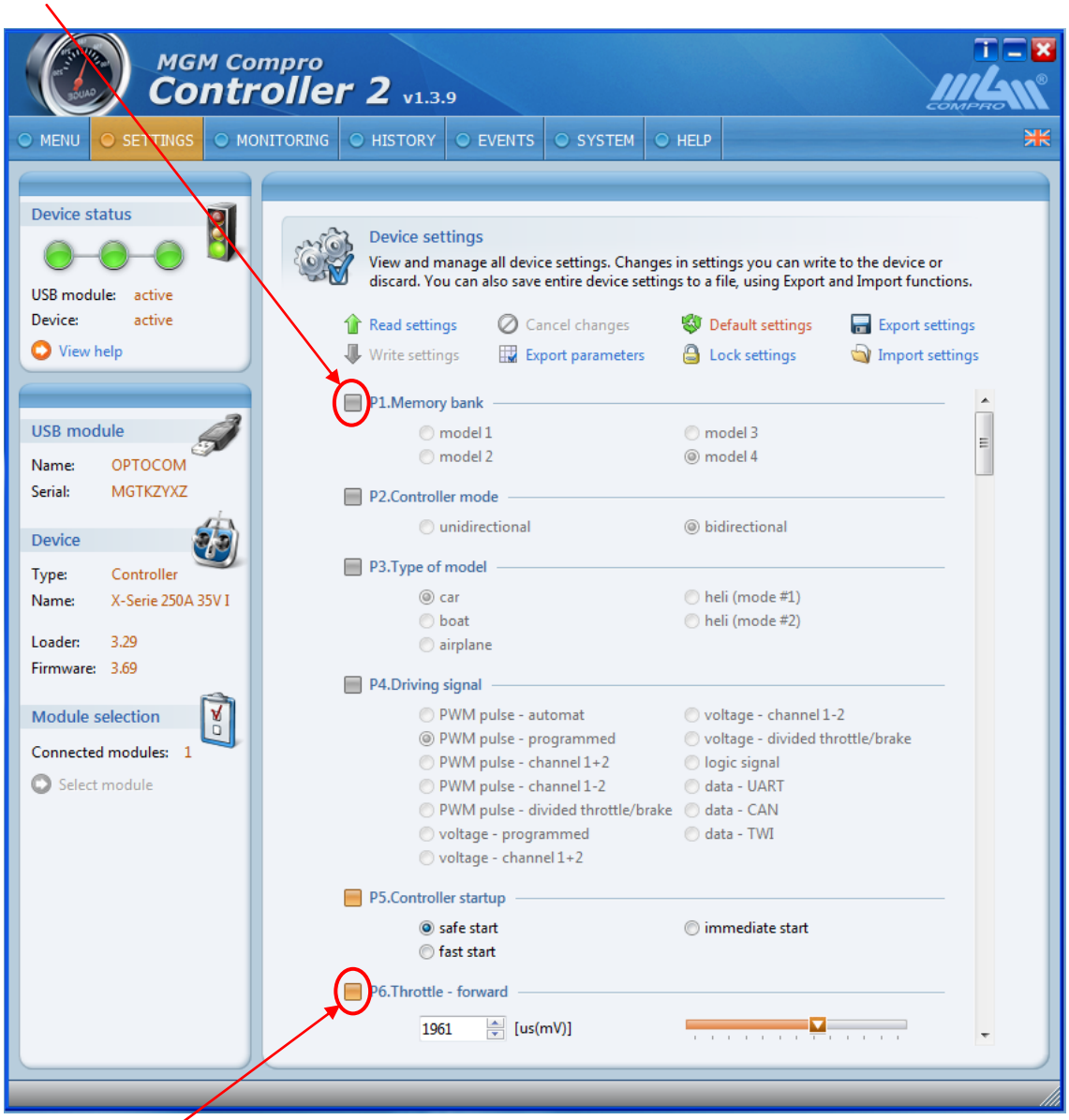

Unlocked parameter, you can change its value

Internal Black Box (flying recorder) – data logger

For correct using of controller's Black Box, set requested value for „Record period" (P71). You can choice more quickly record with more details but shorter record time (each 10 ms, i.e. 100× per second, record time ca 1,2 minutes) or slower and longer record (each 100 ms, i.e. 10× per second, record time ca 12 minutes).

Don´t remember set correct number of motor poles for correct rpm value, respectively also gear ratio and tires diameter for correct computing of car speed of rpm on the mechanical gear box output.

Current version record first 12 minutes of flying (run) respectively 1,2 minutes for quick record. Record automatically stopped after this time. You can also switch the record for the last 12 minutes running the motor (it is always saved the last 12 minutes) – record don´t stopped. Record start when throttle is moved from STOP position after controller turn-on.

Using an external module **LBB_RT** be extended recording time to the order of weeks. If this module is connected, data is automatically stored in it. (§NA)

When you want read recorded data, necessary connect Controller to PC and start program Controller 2.
Choice button „**History**" and push „**Read history** ".
The data reading from the controller are displayed simultaneously to a graph. Chart can be zoom in a separate window (better alternative). Use the icons in the upper right corner you can select individual parameters to the graph. Each variable can be assigned to the left or right axis graph (different scales). The curves associated to the right or left vertical axis, whose properties can be adjusted, as appropriate, may be wearing points for better orientation.
At the same time can be selected in the graph (displayed) up to 9 different variables. Graph can be zoomed, and select part and magnified, magnified graph can move, save to a file in **xls** format, which is currently stored and parameter settings. Also, it can be stored in **hdf** format, which you can always read back into the program and view the graph. To work with chart are available as an option similar to load data from the controller.

Note: In order to store all data, including parameter settings, **you must save the data to a file while the controller is turn-on** !

Recorded data see "Data stored in the record to an internal Black Box" to other sides.


Chart settings
Help
Select parameters you wish to display in the chart. You can select curve color and curve placement in the chart, color scheme and many more.
Parameter selection
Curve settings
Chart appearance
Color
Parameter name
Chart axe
Input voltage [V]
Input current [A]
Motor revolutions [x100rpm]
Controller temperature [°C]
BEC voltage [V]
BEC current [A]
BEC temperature [°C]
left
right
Selected: 7/9
Close
Left axe curve
Right axe curve
Show curve points
Colour point
Point shape:
square
circle
Point size:
Automatic axe range
Chart color scheme
bright
dark
Show grid in chart
Read History
Read history
Clear data
Save data
Export to Excel file
Setting the properties of curves, assigning to the left or right scale, appearance chart
A new area selected to zoom
Input voltage [V]
Input current [A]
Motor revolutions [x100rpm]
Controller temperature [°C]
BEC voltage [V]
BEC current [A]
BEC temperature [°C]
Input request [%]
Output power [%]
The left vertical axis (scale)
„Switch-on“ and „switch-off“ selected variables
The right vertical axis (scale)
Time axis
Enlarged selected area
ZOOM

Evaluation (interpretation) parts of the record:
For greater clarity, the color and scale are changed to images on the previous page.
Here is shows a throttle (input command), the output power in % and current from about 11 to 40 second.

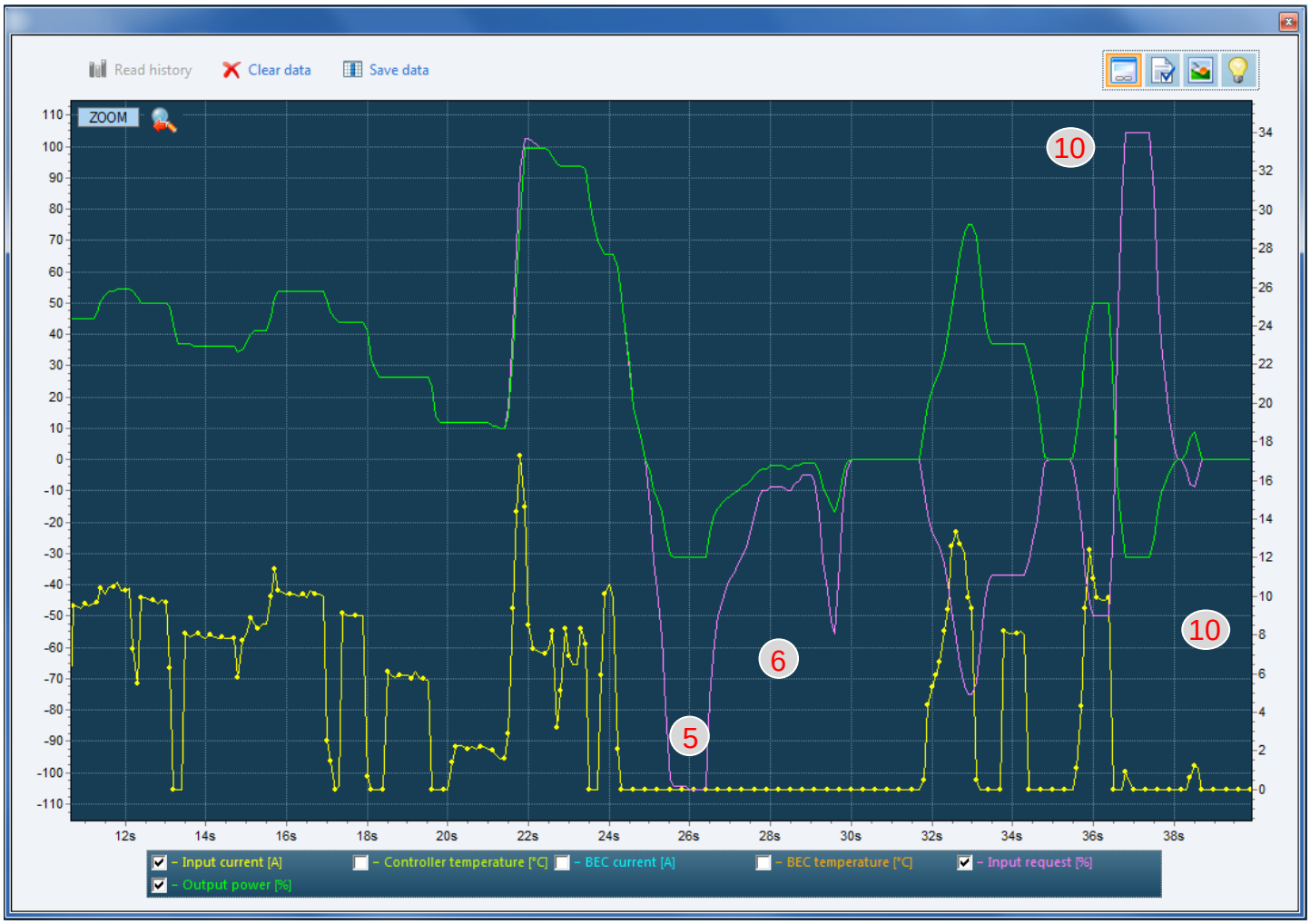

1 partial acceleration (from +42% to +54%) - output power practically follows the input command is a small current peak
2 throttle defend – current decreases during the reduction of power (rpm) to zero (freewheel on)
3 aggressive acceleration (from +10% to +100% (**4**)) - output power (motor PWM) goes to 100%, current peak is strong
5 full brake (input command is **-100%**) – output power goes into negative numbers, the brake is 30% (depending on settings) – battery current is zero
6 partial brake (input command is **-55%**) - output power goes into negative numbers, the brake is about 18%
7 neutral – output power is zero
8 ride backward, partial throttle (input command is -75%) - power goes to positive numbers, current flows
9 ride backward, partial throttle (input command is -50%) - power goes to positive numbers, current flows
10 full brake when driving backward (input command is +100%) - output power goes into negative numbers, the brake is 30% (according to parameters settings) – output power is zero

Note: negative currents flowing to the battery **under braking** are not displayed (shows zero current). It is displayed as "negative" output power in % only.

Data stored in the record to an internal Black Box / The data displayed in real time (Monitoring):

storage / display data			comment
Data:			
D1	Time	sec.	Time information is recorded in
D2	Input voltage	V	Average input voltage (traction battery voltage)
D3	Input current	A	Average battery current
D4	Input command	%	Control variables in % (input signal in %)
D5	The supplied power %	%	Value of the PWM motor - gives a very good image of the supplied power *)
D6	Motor speed (×100)	rpm	Engine speed (engine mechanical rpm)
D7	Speed of system (× 100)	rpm	Speed of system (for gearbox), output shaft of gearbox rpm
D8	Peak currenrt	A	Peak current flowing through the phases (the controller and motor) in the PWM motor pulse
D9	Internal battery voltage	V	Internal battery voltage - calculated value from the battery internal resistance and current
D10	Internal main bus voltage	V	The internal voltage of the controller - information for service
D11	Input power of the controller	W	Input power the controller - the value calculated from the input voltage and current
D12	Car speed	km/h	Travel speed - calculated value from the engine speed, gear ratio and wheel diameter
D13	Controller temperature	°C	Temperature of the controller (power engine part)
D14	Motor temperature	°C	The temperature of the engine when the engine temperature sensor integrated in the winding
D15	Battery temperature	°C	The temperature of the battery, if the sensor is built into the pack
D16	Pulse current	A	Calculated peak current value (indicative value only makes sense if you do not display D8)
D17	Remaining battery capacity	%	Shows the remain battery charge in % (the rest of the fuel) - ONLY in MONITORING mode
Alternative data :			(if the controller is with internal DC / DC converter)
D8-A1	DC / DC converter vcoltage	V	The output voltage of internal DC / DC converter for external use
D9-A1	DC / DC converter current	A	The output current of internal DC / DC converter for external use
D10-A1	DC / DC conv. temperature	°C	Internal DC/DC converter temperature
Status information :			**A**ctive = value ~10 / i**N**active = value 0
S1	Constant speed (rpm)	A / N	Activated by holding constant speed
S2	Cruise Control	A / N	Indication of activation Cruise control
S3	Undervoltage	A / N	Activated when the average battery voltage drop below the set value
S4	Overcurrent	A / N	Activated when exceeding of current limits (from an average currents)
S5	Controller overheating	A / N	Activated when the controller temperature exceeds the set limit
S6	Motor overheating	A / N	Activated when the motor temperature exceeds the set limit
S7	Battery overheating	A / N	Activated when the battery temperature exceeds the set limit
S8	HW overcurrent	A / N	Activating internal HW current fuse (peak value)
S9	HW overvoltage/undervoltage	A / N	Activation if the input voltage drop below the critical limit or increase the voltage above the maximum allowed value **)

) *This information gives you a very good image about power reserve of your drive unit. Especially in constant speed mode (if you're on the limit or you have sufficient reserves), 100% is the maximum.*

) *This information says that there was either a drop of traction voltage below the permitted limit of hardware, or to increase the voltage in over (above) permitted hardware limits, both for any reason. Measured are here immediate values, not averages.*

Important - Alternative data:

If you will record a basic set of data (Dxx) or an alternate set (i.e. data **D8**–**A1** up to **D10**–**A1** instead of data **D8** – **D10**), depending on the parameter **P85** ("parameter set BB '). Choice must be entered into the controller before start record.

Data stored during recording to an external Black Box (module LBB_RT) (§NA)

When connected to the controller module LBB_RT (external BlackBox and Real Time), all subsequent values, i.e. both standard **Dxx** as well as alternative **Dxx-Ax**. The recording time is limited only by used micro SD card.

Monitoring (display data in real time)

If you need monitor the values of individual variables and data in real time on a PC monitor (not telemetry, which currently has limited options for imaging), it is appropriate to use the "Monitoring" data. This allows you to watch all the variables as in the graph (as well as for reading data recorded Black Box) and the numerical values in separate box also.

To start watching this data, you must:

1) set in the controller parameter **P71** (Internal BlackBox record period) on "**Monitoring enabled**"
2) turn-off the controller, disconnect USBCOM 4(i) from the controller
3) turn-on the controller

4a) wait for the initial melody (if **P4** is set to "**Programmed limits**" and that you have correctly programmed input signal limits)

OR

4b) Make sequence to "**Start with automatic throttle limits**" (in case P4 is set to "Automatic limits") and wait to the initial melody

5) connect USBCOM 4(i) to the controller
6) select the "**Monitoring**"
7) press the button "**Start**"
8) wait for completion of the initial communication with the controller

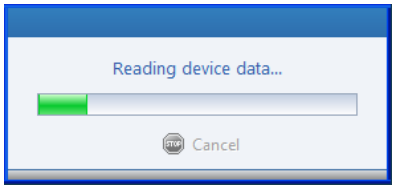

Now you can watch real-time data. Selecting data in the graph is done as in the case of Black Box. Likewise, zooming, navigating in a graph, etc. In addition, a separate window with the numerical values of individual variables is available. Logs can be saved to files, graph picture also.

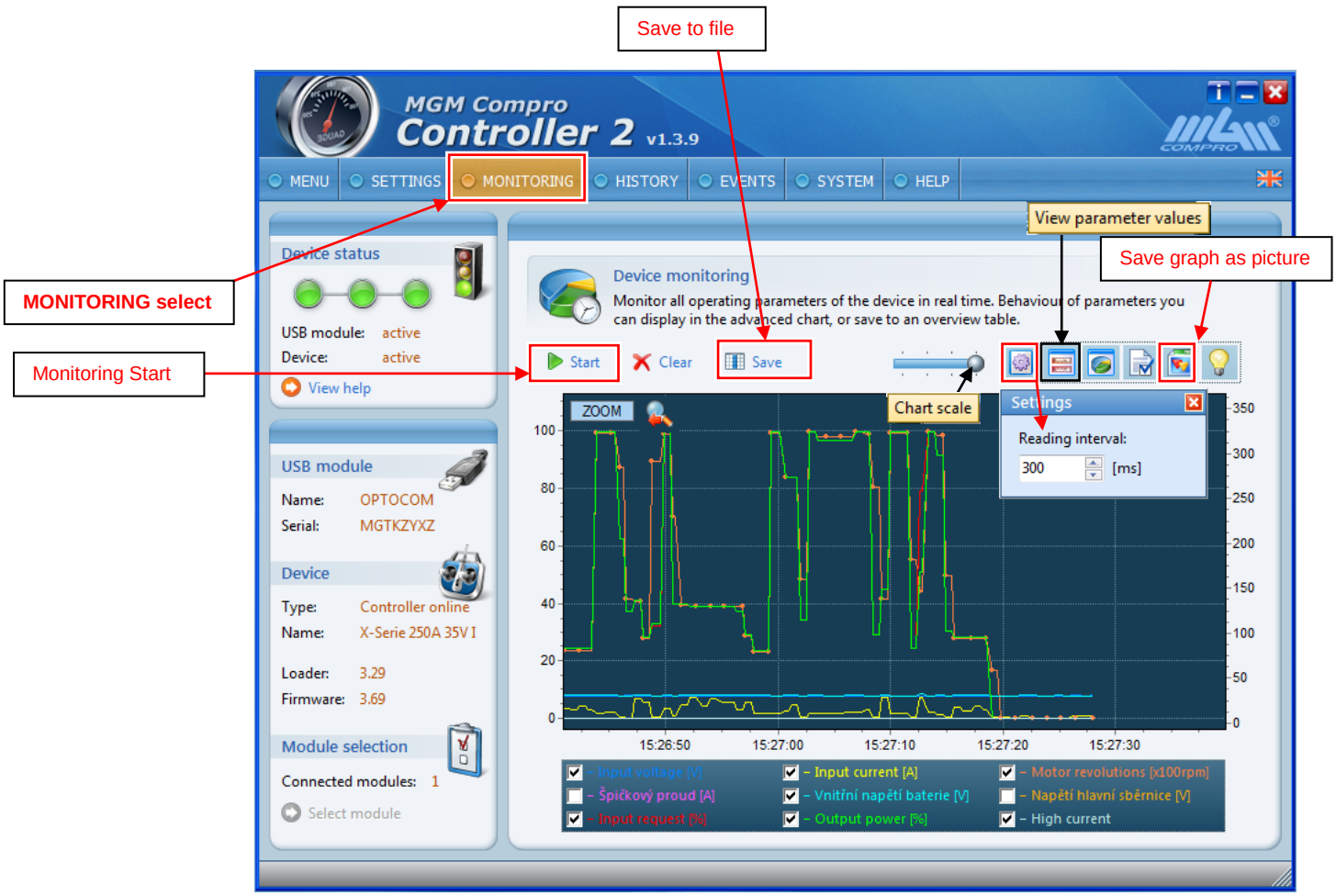

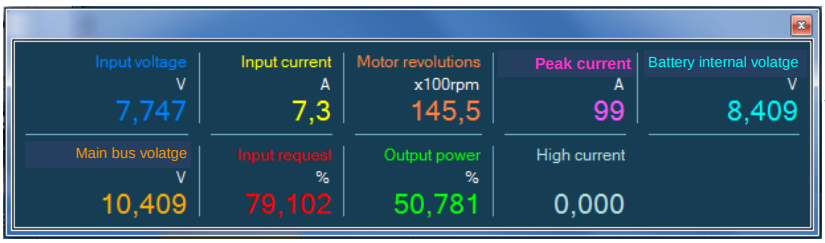

Display the value of variables (parameters) in real time (separate window)

Monitored data:

They are the same as the data stored in the BlackBox, see previous page ("Data stored during recording ……..").

Throttle limits settings (range of joystick, range of control signals)

To respond the controller to control signal (joystick) exactly by your image, it is necessary to unify end points of the control signal (control signal limits) generated by the control equipment (potentiometer, etc.) with the values entered or stored in the controller.
There are two ways.

I. To the parameter **P4** "control signal" set " **PWM pulse - Automat**" (default setting). In this case, the controller **does not remember** end points (limits) of the control signal and after each turn-on, controller again must "learn" what the actual limits of the control signal (signal source). This case is described in detail in the section "**Start with automatic limits** ".

II. To the parameter **P4** "control signal" set the "**Programmed**". In this case, the controller **remembers** the end points (limits) of the control signal. However, it is necessary once controller to "teach" the actual control signal (signal source) limits - this is described below under " **Programmed**". When you change the source control signal (or change settings limit the control signal), you must repeat this procedure described in "Start with automatic limits".

Programmed: The controller remembers the outer limits set of the control signal. Custom settings (reconciliation between the control signal and controller settings) can be done in the following ways.

PREFERED WAY:

a) **By program „*Controller 2*" and setting of your transmitter / signal source**
the controller to set the control signal at a specific numerical value, or leave the company (default) values.
*Parameter **P33** "**Setting from transmitter**" must be set to "**Enabled**".*
*Parameter **P4** "**Control signal**" is set to "**Automat**".*

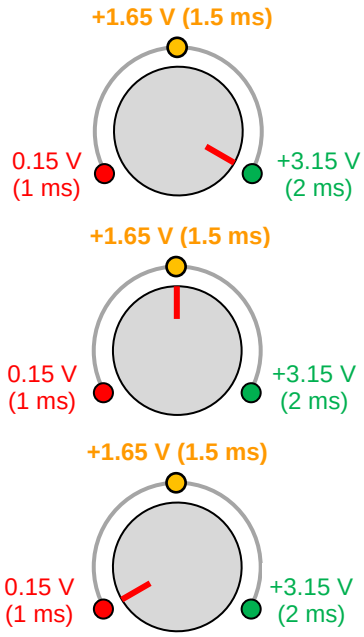

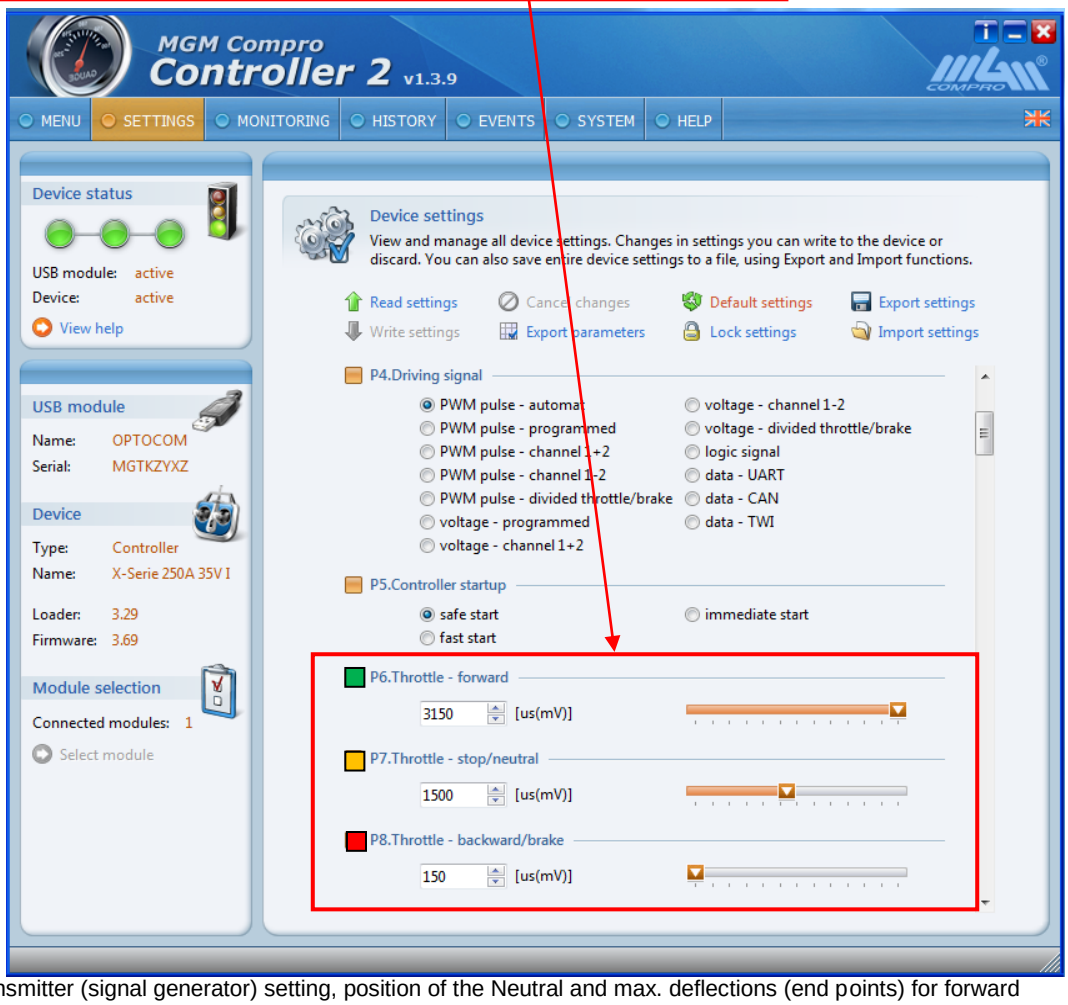

Subsequently is necessary set, by transmitter (signal generator) setting, position of the Neutral and max. deflections (end points) for forward and backward throttle position. Controller's LEDs indication significantly helps you with setting correct values in your transmitter.

Note:
for signal source **without Neutral position** set both values (**Neutral** and **Full throttle backward**) to the same value by program ***Controller 2***.

1) turn on transmitter with throttle stick on STOP (neutral) position, turn on receiver. Controller is connection to throttle channel or other signal source.
2) turn on controller, wait for **blue LED** continuous light (not depend on other LEDs) ……
3) change of Neutral position setting (STOP) in your transmitter that **yellow LED** also continuous light (not blinking) ……
4) move throttle stick to full throttle forward and set your transmitter for continuous light (not blinking) of **green LED** ……
5) when you have transmitter with neutral position, move throttle to max. throttle backward (max. brake) and set your …. transmitter for continuous light (not blinking) of **red LED**

Now in your transmitter (signal generator) are set the same throttle limits (deflections) as values in your controller.

Note: In case your signal source (generator, etc.) have exact and known values (pulse width or voltage), not necessary "match" controller settings (parameters P6 – P11) with generator's values, correct numeric settings is sufficient.
Attention, version with optical isolation of input PWM signal to the shift of the width input signal - in this case, it is preferable to the automatic learning of the control signal limits.

b) **By control signal source** - set corresponding limits at any time direct by the signal source (even without connection to PC).
*Parameter **P33** "**Setting from transmitter**" must be set to "**Enabled**".*
*Parameter **P4** "**Control signal**" is set to „**Programmed**".*

α) Signal sources with NEUTRAL (with lock of STOP position)
*(position **STOP** is identical with the position „**Neutral**")*

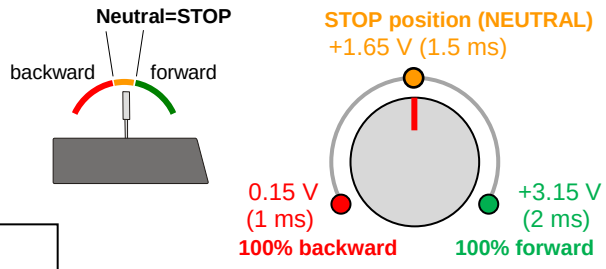

1) Turn on control signal source with joystick (potentiometer, control signal, …) in position „**full throttle forward**". Turn on controller.

2) Controller short beep 3× by motor, **blue LED** and **green LED** lights.
After 10 seconds controller 3× long beeeps.

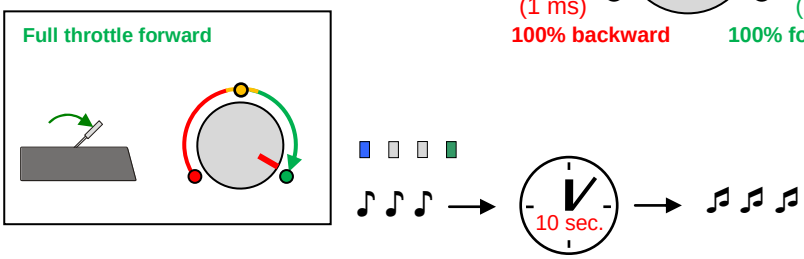

3) You have **3 seconds** now to move the joystick to max. throttle backwards (=full brake)
If in this time limit you do not change the control signal value, the programming process will be finished and the controller will be turned off. Its next operation is possible after switching off and then turning it on again.

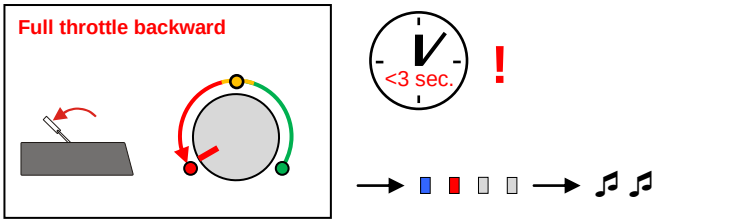

4) If you start moving joystick in this time limit 3 sec. to max. throttle backward position, controller lights **red LED** and after stop in outer position (max. throttle backward) 2× long beeeps.

5) Controller lights **yellow LED** (challenge to moving to **STOP** position). You have **3 seconds** now for moving throttle to Neutral position (=STOP).

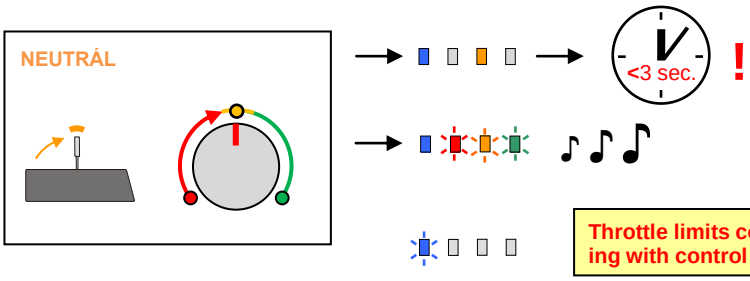

6) Controller confirm correct finishing of this operation by 1× blink together by **red LED**, **yellow LED** and **green LED** and play melody.

7) Controller starts blinking by **blue LED** (others LEDs not light) → necessary switch-off controller.
Throttle limits of your controller corresponding with throttle limits of your transmitter and controller remember these values.

Throttle limits correspond-ing with control signal

β) Signal sources without NEUTRAL (without lock of STOP position)
*(position **STOP** is identical with the position „**Min. throttle** ")*

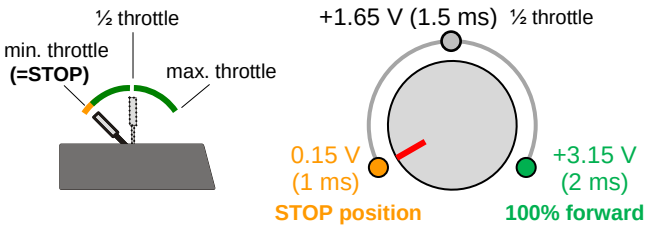

1) Turn on control signal source with joystick (potentiometer, control signal, …) in position „**full throttle forward** ".Turn on controller.

2) Controller short beep 3× by motor, **blue LED** and **green LED** lights.
After 10 seconds controller 3× long beeeps.

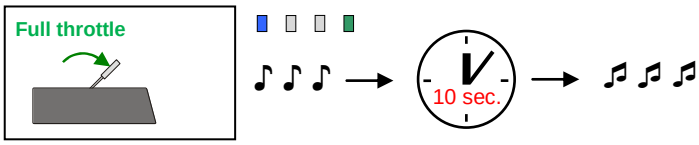

3) You have **3 seconds** now to move the throttle to min. throttle (=STOP)
If in this time limit you do not change the control signal value, the programming process will be finished and the controller will be turned off. Its next operation is possible after switching off and then turning it on again.

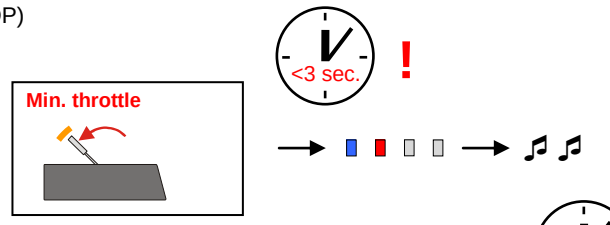

4) If you start moving joystick in this time limit 3 sec. to min. throttle position, controller lights **red LED** and after stop in outer position (min. throttle) 2× long beeeps.

5) Controller lights **yellow LED** (challenge to moving to STOP position). You have now **3 second** for moving throttle to STOP position. Leave the joystick in position min. throttle (= STOP) at least 3 seconds.

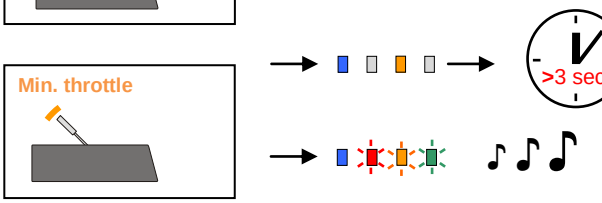

6) Controller confirm correct finishing of this operation by 1× blink together by **red LED**, **yellow LED**, **green LED** and play melody.

7) Controller starts blinking by **blue LED** (others LEDs not light) → necessary switch-off controller.
Throttle limits of your controller corresponding with throttle limits of your transmitter and controller remember these values.

Throttle limits correspond-ing with control signal

Start with Automatic throttle limits

*In the parameter **P4**, „**Control signal**" is set „**Automat**", this is also default setting.*

Very helpful information about how controller evaluates the current position of the throttle stick, give LEDs of the controller.

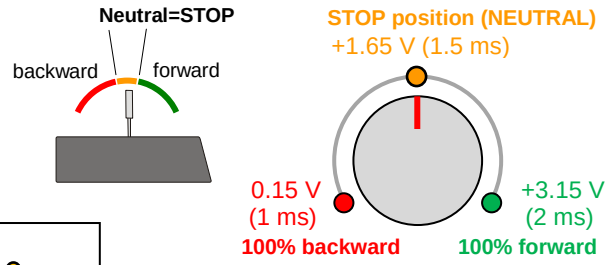

α) Signal sources with NEUTRAL (with lock of STOP position)

*(position **STOP** is identical with the position „**Neutral**")*

1) Turn on control signal source with joystick (potentiometer, control signal, …) in „**Neutral**" position (=STOP)

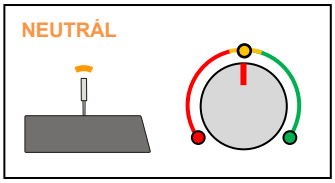

2) Turn on controller, wait for **blue LED** + **yellow LED** continuous lights + 1× short beep ……

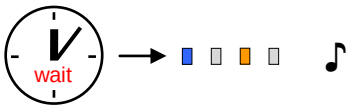

3) Controller alternately light **yellow LED** and **green LED** → challenge to moving throttle stick from "**neutral**" to "**full throttle forward**" position.
After finishing of motion light **green LED** + 3× short beep

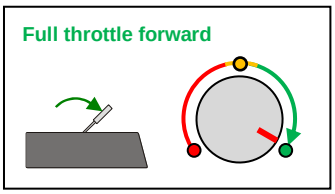

4) Controller alternately light **green LED** and **red LED** → challenge to moving throttle stick from "**full throttle forward**" position to "**full throttle backward**" position.
After finishing of motion light **red LED** + 2× short beep

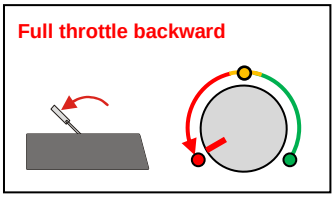

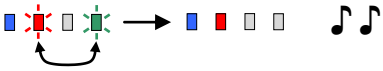

5) Controller alternately light **red LED** and **yellow LED** → challenge to moving throttle stick from "**full throttle backward**" position to "**neutral**" position.
After finishing of motion light **yellow LED** + 2× short beep + play melody

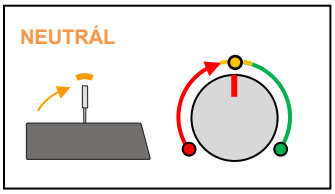

6) **You can start now (controller is ready to run).**

β) Signal sources without NEUTRAL (without lock of STOP position)

*(position **STOP** is identical with the position „**Min. throttle** ")*

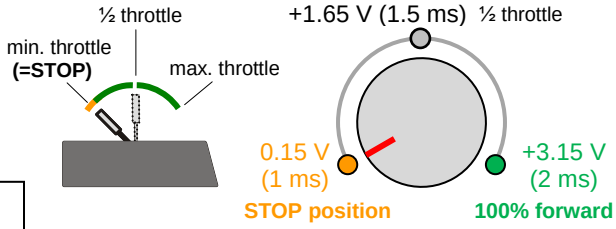

1) Turn on control signal source with joystick (potentiometer, control signal, …) in „**Neutral**" position (=STOP))

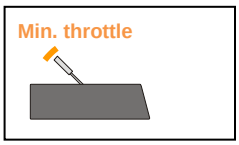

2) Turn on controller and wait for **blue LED** + **yellow LED** continuous lights + 1× short beep

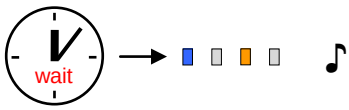

3) Controller alternately light **yellow LED** and **green LED** → challenge to moving throttle stick from "**neutral**" to "**Full throttle**" position.
After finishing of motion light **green LED** + 3× short beep.

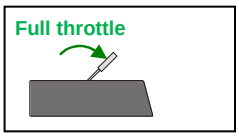

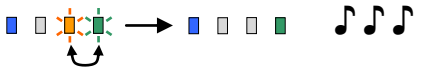

…

4) Controller alternately light **green LED** and **red LED** → challenge to moving throttle stick from "**Full throttle**" position to "**Min. throttle**" position.
After finishing of motion light **red LED** + 2× short beep

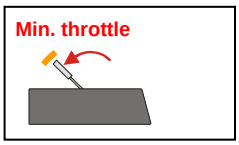

5) Stay on this "**Min. throttle**" position (STOP) at least 3 seconds, controller light **yellow LED** + play melody

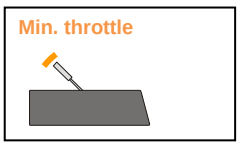

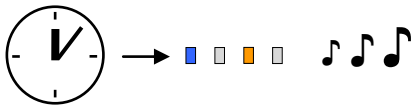

6) **You can start now (controller is ready to run).**

Start with programmed throttle limits

a) Type of controller's start (parameter P5) **is set to „Safety start" (default value) or „Fast start".**

In the parameter **P4** „**Control signal**" is set "**Programmed**" or some possibility of **Programmed, parameters II** (under line ======)
Controller remembers set throttle limits.

1) Turn on control signal source. Joystick (potentiometer, control voltage, …) is in position **STOP:**
= neutral for joystick with neutral
= min. throttle for joystick without neutral

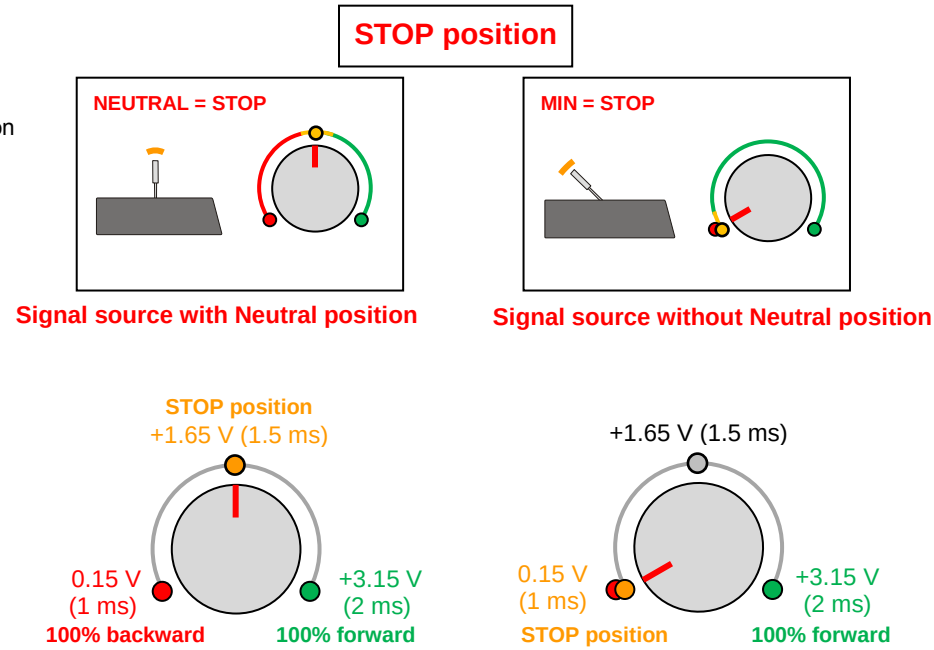

If not the joystick in the **STOP position, the controller waits for the joystick** (potentiometer, control voltage, …) **to move to this position**, before the engine cannot run. The controller indicates the position of the joystick by LED indication:

- signal is **above neutral position**, controller wait for Neutral.....
- signal is **bellow neutral position**, controller wait for Neutral.....

2) Turn on controller, wait for **blue LED** + **yellow LED** continuous lights + melody .....
3) **You can start now (controller is ready to run).**

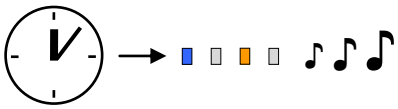

---

b) Type of controller's start (parameter P5) **is set to „Immediate start ".**

In the parameter **P4** „**Control signal**" is set "**Programmed**" or some possibility of **Programmed, parameters II** (under line ======)
Controller remembers set throttle limits.

1) Turn on control signal source. Joystick (potentiometer, control voltage, …) is in any position (any signal value).

The controller does not check joystick position (if joystick is in the **STOP** position) after turn-on **!!!**

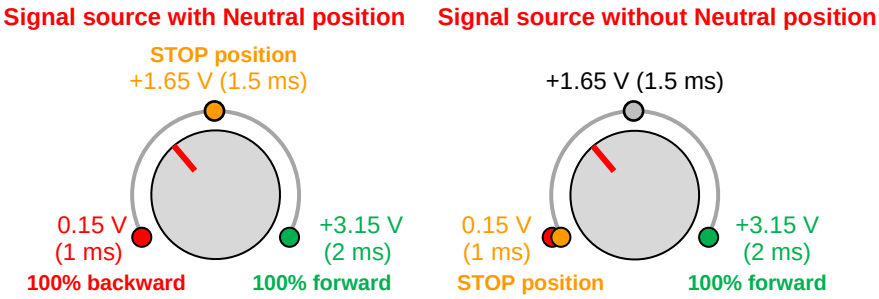

2) Turn on controller, when lights **blue LED** + **other LEDs by current value of driving signal.**

! WARNING ! MOTOR START IMMEDIATELY run with PWM (rpm, torque) corresponding with driving signal ! WARNING!

Maximal revolution of the output shaft Settings

For setting of Maximal revolution of unloaded motor (view from the motor, not mechanics of the system) necessary make following steps.

Set these parameters values by program ***Controller 2*** (obligatory data):

Parameter P50 – **max. requested rpm limit** (on the gear output), **RR**
Parameter P47 – **number of motor poles** **PP** (determined every correct motor producer or you can count magnets, see picture)
Parameter P48 – **gear ratio of gearbox** **G**

By these steps you have set maximal revolution. This setting is also revolution of 3rd throttle (flight mode ≡3) for HELI mode #2.

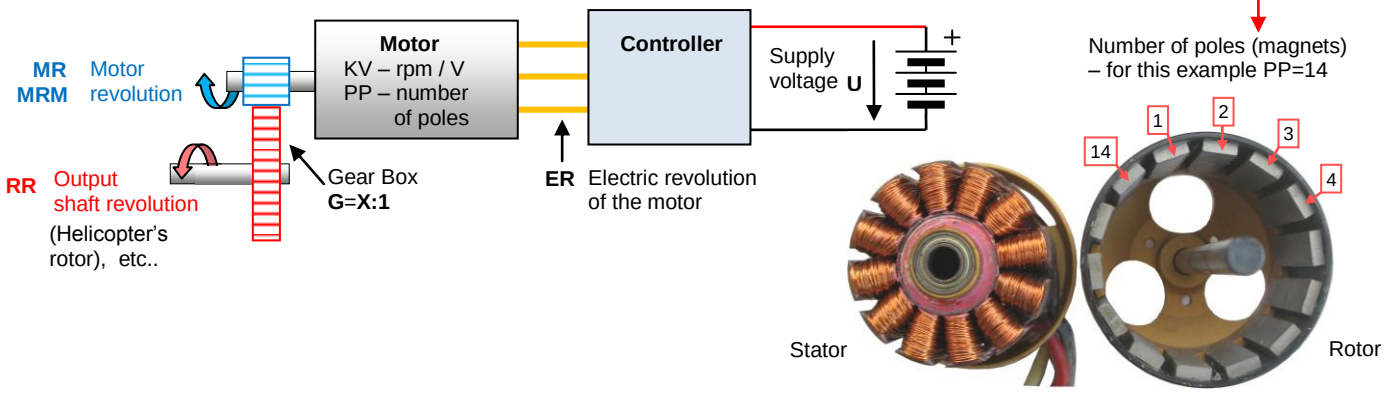

We recommend make checking, if controller range of rpm (electric) is sufficient as well as if motor choice is correct:

"Electric revolution" of the motor is the same as mechanical revolution only for 2-poles motor. Motors with higher number of poles have electric revolution (which must generate controller) proportionally higher (4 poles motor 2x, 6 poles motor 3x, etc.). Controller cannot work with higher revolution than specified in Technical data (for HBC controllers 250.000 rpm).

ER = RR x G x PP/2 (electric revolution)

where: RR – requested mechanical revolution on the output shaft (for example helicopter's rotor, etc.) [rpm / V]
G – gear ratio of gearbox
PP – number of poles of the motor

Result must be < **250.000** rpm. In case of result is higher value, necessary lower gear ratio or use motor with lower number of poles.

Example:
requested mechanical revolution on the output shaft **RR** = **2.000** rpm.
gear ratio is 10 tooth of pinion, 50 tooth of main shaft, i.e. **G** = 50/10 = **5**
number of poles of the motor **P** = **12**

ER = **RR x G x PP/2 = 2000 x 5 x 12/2** = **60.000 rpm**

Result: therefore this value 60.000 < 250.000, controller is suitable for this system.

In next step necessary check motor, if requested output revolution is correct with available voltage.

Requested mechanical revolution of the motor:
MR = RR x G

where: RR – requested mechanical revolution on the output shaft (for example helicopter's rotor) [rpm / V]
G – gear ratio of gearbox

We recommend this revolution no more than **70 - 80%** of **max. available mechanical revolution of the unloaded motor (MRM).** In other case not assurance that system has enough reserve of the power for reliable stabilization of the requested revolution.

Maximal available mechanical revolution of the unloaded motor:
MRM = **KV x U**

where: KV – motor revolution [rpm / V]
U – supply voltage [V]

Example:
requested mechanical revolution on the output shaft **RR** = **2.000** rpm.
gear ratio is 10 tooth of pinion, 50 tooth of main shaft, i.e. **G** = 50/10 = **5**
Motor **KV** = **800 rpm/V**
Max. supply voltage: **(6 x Lipol), i.e. U** = **25,2 V** (charged battery) / **U** = **19,8 V** (discharged battery – last 20% of energy available)

MR = RR x G = 2.000 x 5 = 10.000 rpm
MRM = **KV x U = 800 x 25,2 = 20.160 rpm** (charged battery)
MRM = **KV x U = 800 x 19,8 = 15,840 rpm** (discharged battery)

Result: Therefore requested (MM) 10.000 rpm is lower value than 70 - 80% of max. available revolution (=63%), motor is suitable for this system.

Maximal revolution of the motor Settings

If it is important to limit the engine speed (not the transmission system), you need set only:

Parameter P86 – **max. requested rpm of the motor** **MR**
Parameter P47 – **number of motor poles** **PP** (see above)

For maximum engine speed of electrical ER are the same as stated above.

Update SW inside the controller (firmware)

When you want make update firmware in you controller to newest available version, you need **USBCOM 4** module (or in case of feeding from power supply **USBCOM 4i** module – isolated version) and **CC_11** cable (the same as for standard programming of parameters).
Controller must be connected to internet.

Starting sequence for firmware updating follows:

0. Connect USBCOM 4(i) module to PC and Start program ***Controller 2*** first. **Connect controller, but no turn-on yet.**

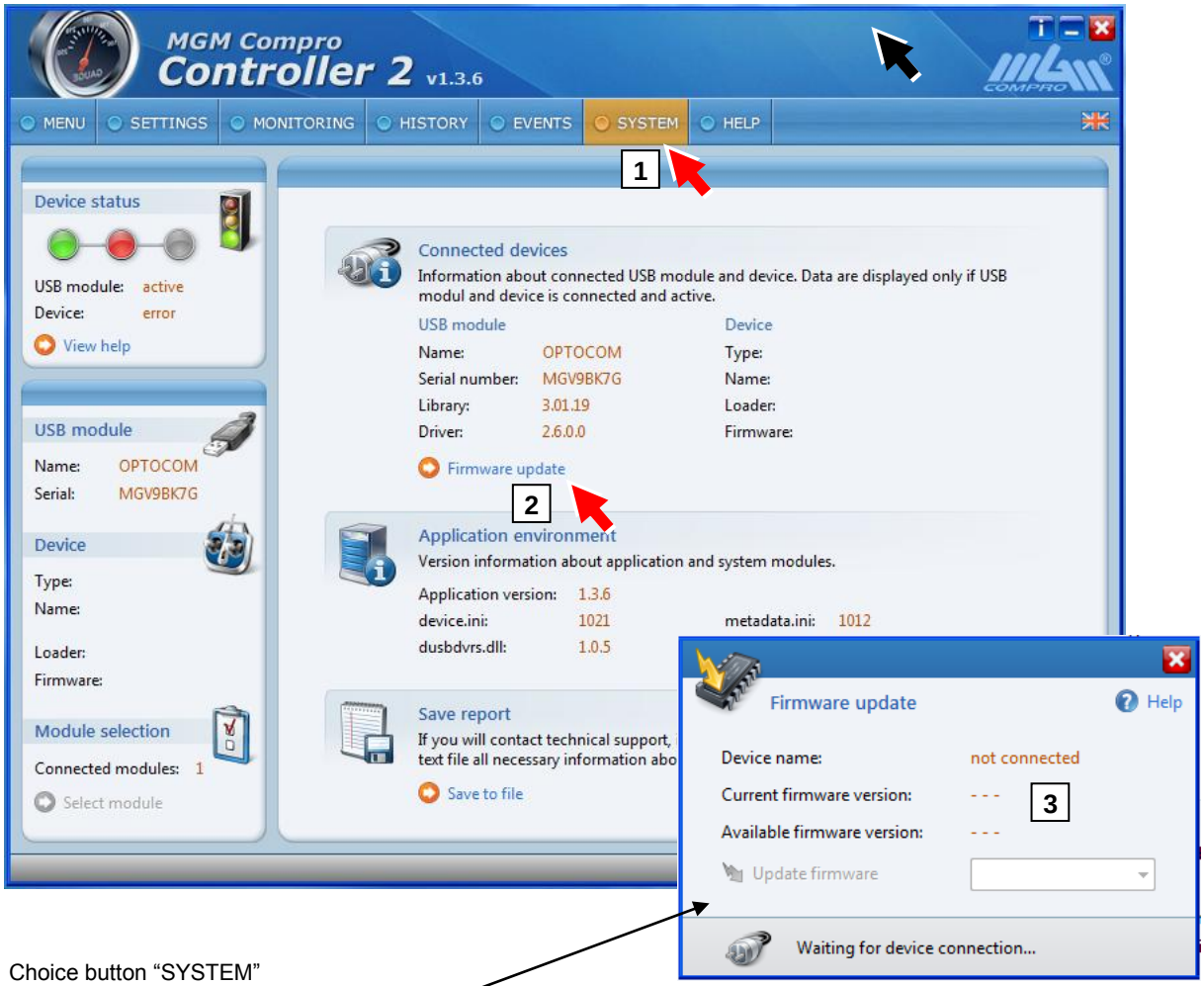

1. Choice button "SYSTEM"
2. Choice "Firmware update"
3. Windows "Firmware update" open

4. Turn-on your speed controller by its switch or applying main voltage. Your device version as well as available firmware version is displayed. ***(If you already had the controller is switched on, now it must be switched off and on again)***

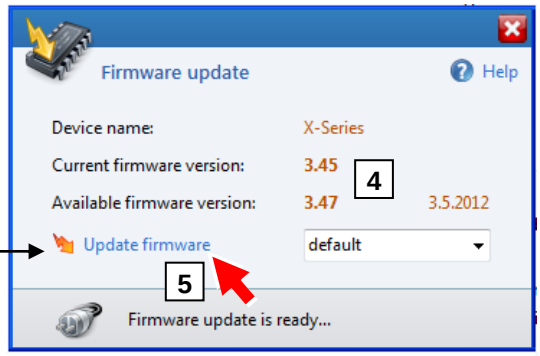

5. Push "Update" button release.

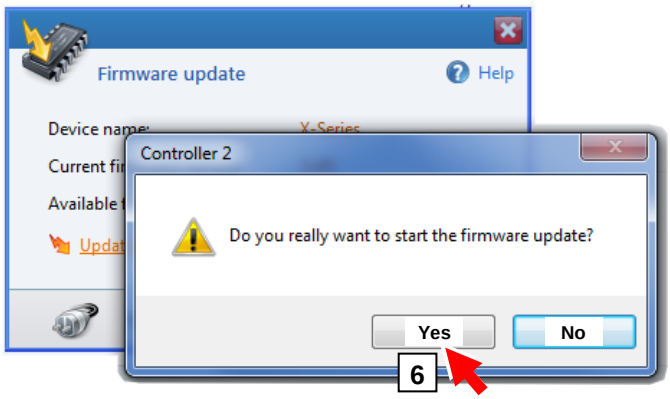

6. Confirm firmware updating

7. Updating procedure start.

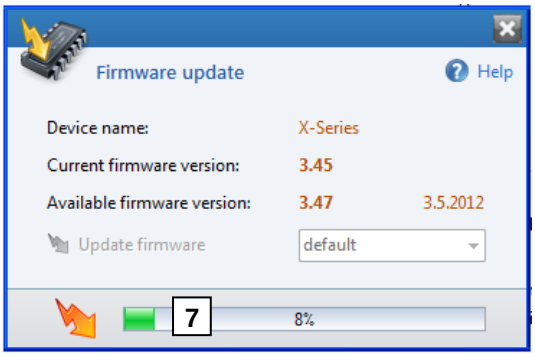

8b. when procedure corrupt (communication error etc.), is displayed this message Necessary start this update again.

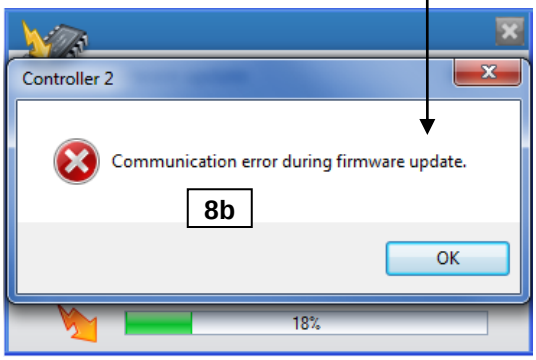

8a. When procedure correctly finished, message will appear. Push OK.

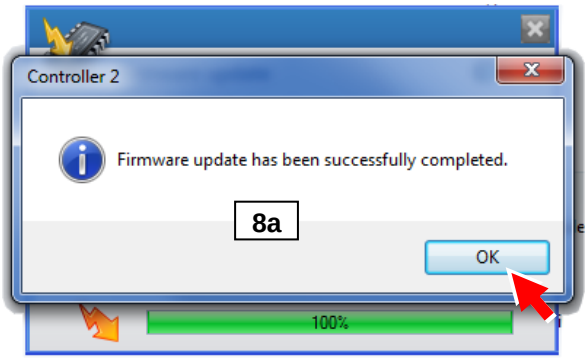

9. Follow next instruction.

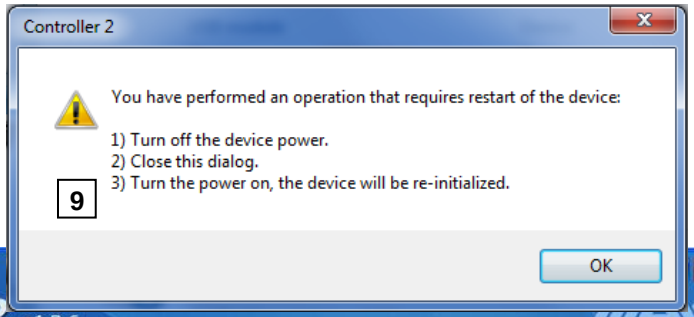

10. After restart device (your speed controller), newest version of its firmware is displayed. Update procedure is complete.

Note:

You can start updating procedure for unlimited amount of tries, the controller cannot be broken down by failed update, but you have to finish the update procedure without errors **[8a]** if you want to use it with motor or parameter settings etc.

When procedure don´t finished correctly **[point 8b]**, controller (device) after next turn-on only slightly lights (glows) by **blue LED**. **Controller don´t work, not possible set parameters, etc. In this case is necessary this updating procedure repeat !**

Note: Please, check also, if newest version of program „***Controller 2***“ isn't available. Newest parameters or other changes, which correspond with new version of the firmware, can be added. Without a corresponding version of program ***“Controller 2”*** settings will not work correctly!

Installation and run program Controller 2

Are very simply and intuitive. Details are described in manual „***Installation and controlling of program Controller 2***“, follow instructions in this manual please.

Update of program Controller 2

Update SW version of your program ***Controller 2*** is possible make by two ways.

1. After start program automatically advice to new version in left upper corner – start update by this way.

Choice “**Download updates**”

and push **Update**

OR

2. You can check if new version is available any time → click to **HELP**, **Application update** and **Click for updates**

3. When is new version available, click to **Yes**

4. Wait for finishing

5. Last step is restart, after this you have newest current version.

Controller states indication, Error messages (firmware 3.8x and higher)

Controller indicate states by 4 LED and also acoustic by motor beeping. ♪ short beep ♫ long beeeep ♪ ♪ ♪ melody

In this example blue LED blinking, others lights continuously: / blue is light, other is off:

Possible states:

short blink of all LEDs after switch/on controller (check of LED) .....

a) correct states (= blue LED lights continuously):

1 - all is O.K., Controller communicate with the PC .....

2 - all is O.K., but controller without driving signal (all lost driving signal) ...

3 - throttle position STOP (neutral) .....

4 - signal is **above neutral position**, controller wait for Neutral.....

5 - signal is **bellow neutral position**, controller wait for Neutral.....

6 - partial throttle forward .....

7 - full throttle forward (full power).....

8 - partial brake when run forward .....

9 - full brake when run forward .....

10 - partial throttle backward .....

11 - full throttle backward (full power).....

12 - partial brake when run backward .....

13 - full brake when run backward .....

14 - **move** throttle from neutral to max. forward..... LED flash alternately

15 - **move** throttle from max. forward to max. backward..... LED flash alternately

16 - **move** throttle from max. backward to neutral ..... LED flash alternately

17 - operation is in progress ..... mostly just blinks 1×

(Automatic sensor adjustment, set up rotor speed, setting limits according to the transmitter, ...)

When happen some of next states (problems), correct states are not indicated. These not correct states indicated some problem in the system. These states last until switch-off (also its combination).

b) limit operational states (=blue LED not lights):

20 - power is reduced by high controller temperature.....

21 - motor is switch off by high controller temperature.....

22 - power is reduced by battery low voltage .....

23 - motor is switch off by battery low voltage .....

24 - power is reduced by high current peaks .....

25 - braking is reduced by high battery internal resistance .....

c) critical and error states (=blue LED blinking + some other LED):

30 - motor overheating .....

31 - destroy or damaged motor, sensors problem for SE version ..... LED flash at the same time

32 - battery overheating.....

33 - *free (not used)* ..... LED flash at the same time

34 - *free (not used)*.....

35 - current overload ..... LED flash at the same time

36 - damaged HW, call service ..... LED flash at the same time

d) special states

40 **- RESET state (=only blue LED blinking)** ..... controller is necessary **turn off** and **on again**, this is required for some settings

41 **unfinished firmware update (=Blue light is very weak)** ..... procedure "Firmware Update" must be repeated

42 - supply voltage lost or with bad value ****)** or some problem in HW .....

43 - supply voltage is higher than the allowed limit ! .....

****)** bad soldered connectors, disconnect battery inside, etc. – measure voltage on the supply cables to the controller (red and black), after main connectors, on the controller side. The most easy by wiretap (inject) by sharp pin or needle and connect voltmeter to these pins.

Sparking prevent when connect higher voltage

When connecting a Li-xxx pack to the controller, strong sparking commonly occurs. Fast charging of the controller filter capacitors causes this. The higher battery voltage (for the higher the cell count) and/or the lower the internal battery resistance (and the better the quality of the pack) caused more intensive spark. The better the capacitors in the controller and the higher the capacity of the capacitors, the bigger spark occurs also. Besides the small shock (due to the sparking), the charging current of the capacitors may be in, extreme cases, so great that damage or destruction of the capacitors occurs. Solution is simple by using antispark resistor.

How to connect the positive leg or wire (shown here without insulation):

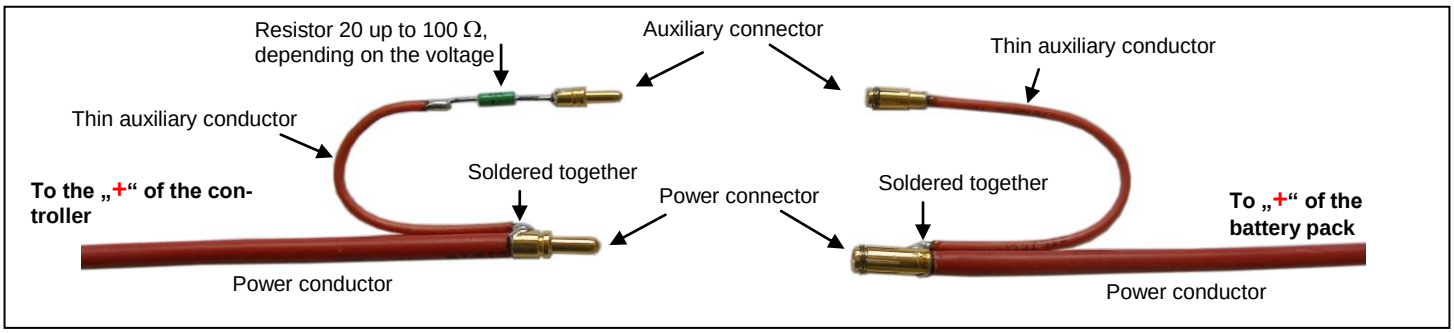

Connectors as well as the resistor are insulated by heat shrink tubing.

How to connect the battery:

1) connect the “**–** “ leg of the battery to the “**–** “ on the controller.
2) in the positive circuit, **first connect the “+” leg of the controller to the auxiliary connector** (to which a resistor with tens of ohms is connected in serial). This will limit the charging current when connecting the wires and will charge the filter capacitors without sparking.

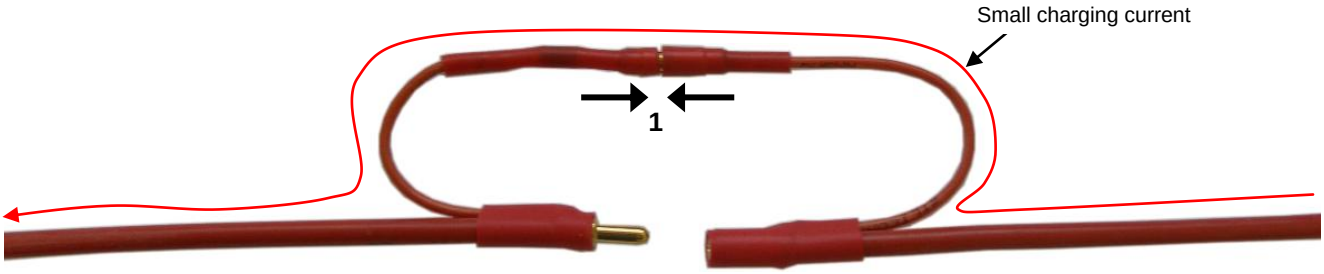

3) now connect the power wires (sparking will not occur). Main current flow is going through this power connector. You may start the motor now.

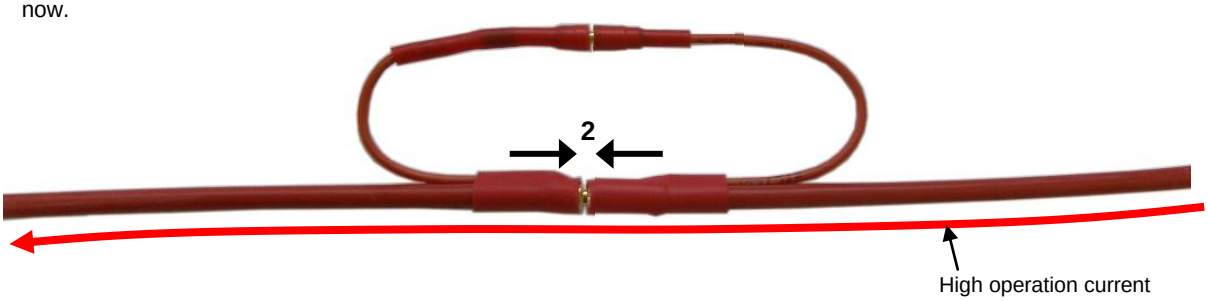

Note:

There are no special requirements on the auxiliary connector. The current is small (1- 2A) and lasts only for a short time. Resistor value between 20 to 100Ω is depending on the voltage of the battery pack. However, it is not necessary to use these exact values because of wide variation.
for 4 – 8 Lipol use 20Ω - 40Ω
for 8 - 12 Lipol use 50Ω- 100Ω
for 12 - 15 Lipol use 100Ω

Values are not critical and can changed within wide limits. Suitable charging current for capacitor is of the order 1 – 2A.

Resistors 22Ω, 47Ω a 100Ω are included in the controller.

Additional information

Influence of the battery quality to controller behavior (automatic current reducing).
If the peak current during start and acceleration loaded battery to the point that the voltage has dropped below the minimum controller voltage, i.e. below about 10V, the controller automatically reduce power (current) to the engine (i.e. the speed ramp-up) so that the battery voltage does not drop below the safe limit.

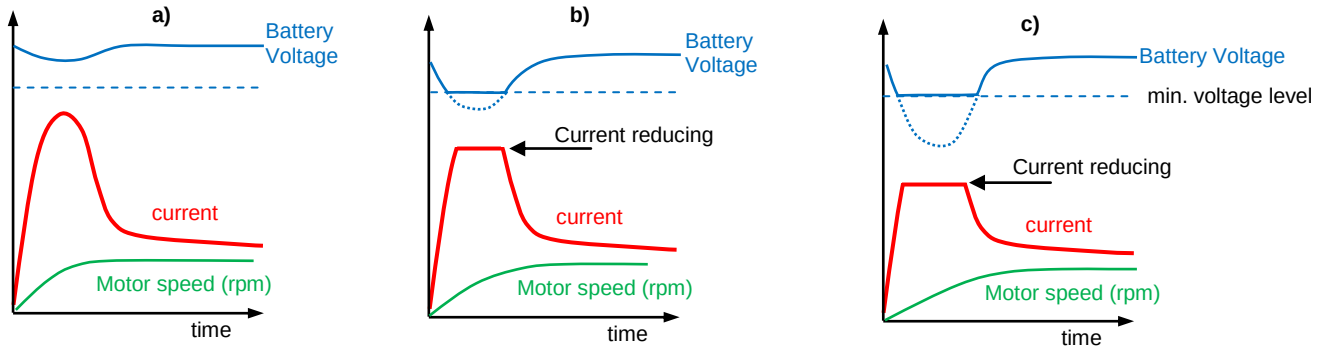

a) Very quality („hard“) battery, voltage drop is low under load, not start current reduce process
b) Not so “hard” battery (worse quality) or too high load or too short acceleration time – current is reducing during acceleration so that voltage not dropped under minimum voltage border.
c) Not suitable battery, damaged battery, extremely high load or extremely short acceleration time – current is significantly reducing for hold battery voltage above minimal voltage border

Some of Protective and Safety mechanisms of TMM® controllers

Controllers mask interference and signal losses for up to defined time in parameters. Motor revolutions are gradually reduced for longer lasting signal drop outs or interference. When the signal is restored, the controller goes smoothly back to the required power. Long lasting signal drop out (or its absence) is indicated by LED.

Engine does not start, if the controller does not have the correct control signal. It also does not start after turn-on until the joystick is not in the "engine off", i.e. in the neutral position (except for the "fast" or "immediate" start).

Temperature fuse of the controller is set to ca 100°C.

Current fuses of the controller have the task of limiting currents at current overload controller.

Monitor voltage circuits are responsible for disconnecting the motor in right moment (or reducing engine power) if the battery is discharged (or over discharged), as in the case of lithium batteries is usually damaged. It can be advantageously combined with check voltage of each cell (a separate external module connected to the ICS-2 connector).

Advantages of these mechanisms for TMM® controllers:

1) Thanks to the use of the automatic current fuse (**ACF**) the possibility of current overload of controller, motor and accumulators (and their possible damage) even at crisis points is significantly reduced - controller disconnects the motor.
2) the used system of intelligent power reduce (**IPR)** always ensures through measurements of voltage, currents, accumulator condition and calculations an optimal point of starting continuous reduction of motor performance (or the point when motor is switched off, according to the setting), so that the accumulator cells do not get extremely discharged – which is very important specially for Lipol cells. This, not mentioning other advantages, reduces the possibility of reversal of poles of lower cells (applies mainly to NiCd / NiMH cells).
3) the automatic current reduce (ACR) does not allow voltage drop below the threshold voltage of controller under extremely high current load.

When switching the motor off (reducing power) at a solid boundary as it is with standard controllers **(chart a)** it is not possible to determine the amount of energy which is kept in the controller after the motor is switched off. It strongly depends on currents and inner resistance of the battery. The better the cells (harder) you have and the smaller the instantaneous current, the less energy (= time) remains for landing after the motor is switched off by the controller. On the other hand, the worse the cells and the higher the instantaneous currents, the more energy remain – but you do not know how much energy exactly.

Comparing to this, **TMM® controllers** (**chart b**) ensures that the remaining energy (after the motor is switched off by the controller) is practically independent on currents and inner resistance of the battery and it is possible to change its amount for some types of controllers according to one's needs (higher for gliders, etc.). From the motor operation time view it is usually an insignificant amount of energy, the motor power would decrease very fast anyway.

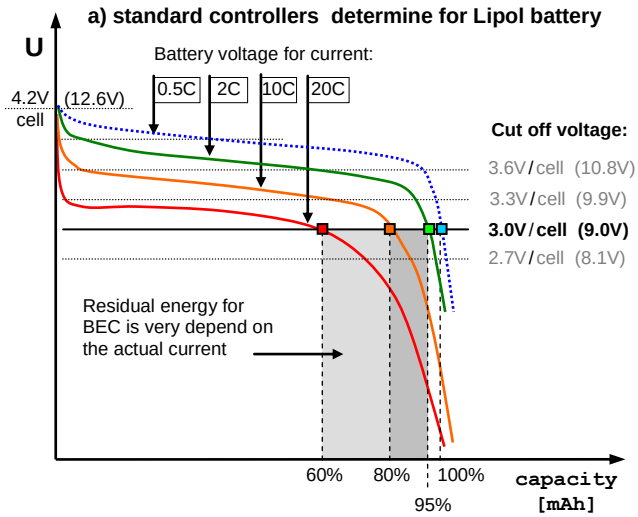

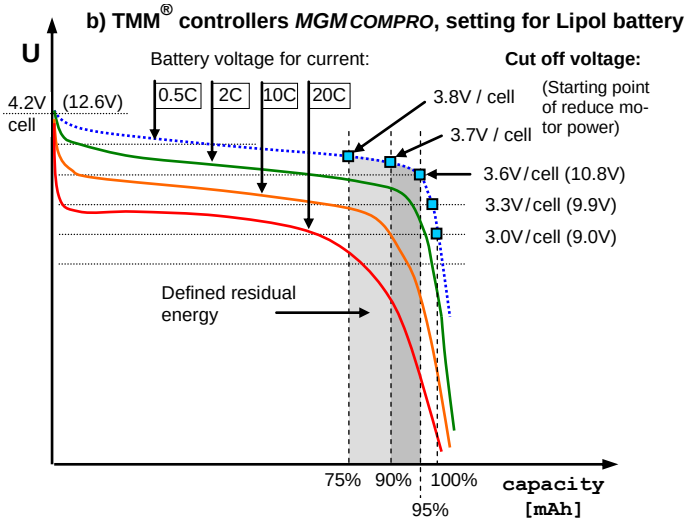

Regular controllers (even Lipol compatible) have either a solid switching off voltage (for example 3V per cell) or it is possible to set this value. For example for set boundary 3V per cell the controller is switch off or it starts to reduce revolutions when this value is reached no matter how big the drawn current is. **This means that the residual energy significantly changes according to a instantaneous current load of batteries** (and also according to inner resistance of the cells] from 0 to 95 % - depending only on the set voltage boundary. If the example on the graph above is considered with a set boundary of 3V per cell the controller will switch off when drawn current is 20C when there is still 40% of energy still left, while for 5C current when only 5% of energy is left. For boundary of 3.3V per cell the controller would switch off for currents of 20C when only few percent of energy were consumed while for 5C after 92% of energy would be consumed.

TMM® controllers handle the situation quite differently. The switching off voltage is always recalculated into „inner" voltage of the battery – therefore is independent on both drawn current as well as inner resistance of the accumulator. **This means the set residual energy is always the same and does not depend on currents and inner resistance of battery.** Batteries are then always discharged to same level, regardless how big currents are drawn. The value of set residual energy is therefore only little dependent on the features of battery and the discharging current. For example for switching voltage 3.7V per cell controller switches off the motor or starts to reduce revolutions always after 90% of energy is used up no matter if the drawn current is 20C or 5C.

(The voltage of accumulator after switch of the current always rises to a value close to curve of 0.5V – this discharging curve is close to „inner" voltage of battery. This curve describes how much the controller is discharged.

Switching-off voltage:

Thanks to the above described mechanisms, the switching—off voltage (always meant as switching-off voltage per cell !) of **TMM®** controllers is independent on the amount of drawn current and the inner resistance of the battery. For each type of cells, switching-off voltage is preset (A123 to 2.5V, Lipol to 3.2V, etc.). **The controllers also feature possibility to set universal switching-off voltage** for existing types of cells and even for those that do not exist today, **UNI.** This voltage range is 0.1 – 60.0 V/cell.

Accessories

FAN 05 with screws

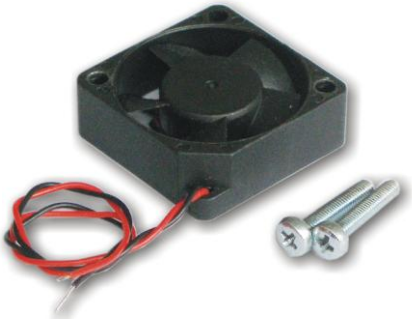

For mounting fan(s) to original cooler (on the controller) is possible use only enclosed screws.
Use another type of fan or another screws for mounting to controller is strictly prohibited !

Power connectors MPJET 2,5 – 3,5 – 5,0

Indication module BL_04D

Indication module BL_04D - detail

Super brightness LED with wide viewing angle

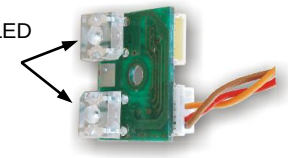

Extended cable EC_2 to ICS-2 connector

Battery temperature sensor (BT)

Extended cable EC_2 to ICS-2 connector – „Y“ type

Cable for motor sensors,
EFRA compatible CMS_6 (20 cm)

Communication module USBCOM 4 **and** **galvanic isolated communication module USBCOM 4i**

Connecting cable CC_11

Content of delivery

- Controller in box
- 3 antispark resistors
- CD with program Controller 2, with manual and other information
- Printed basic (general) information
- Warranty certificate

Product Warranty

MGM COMPRO guarantees, this product to be free from factory defects in material and workmanship. Warranty period is of 24 months from date of purchase and purchase within the EU. Warranty for purchases made outside the EU is inline with the respective legal regulations. Warranty liability shall be limited to repairing or replacing the unit to our original specifications.

The warranty may be claimed under the following conditions:
The product has been used in the coherence with the instructions for use and only for purposes stated in the instructions and provided that none of the conditions for which the warranty cannot be claimed (see below) occurred.

It is necessary to provide together with the product for repair:

- a copy of sales receipt (if a warranty repair is claimed)
- detailed description of the problem – how it occurred and what is the problem
- description of the RC set you were using when the problem occurred (number of cells, their capacity, motor, throttle, etc.)
- your phone number and/or email address in order to allow further consultations regarding the problem

.

The warranty does not cover and therefore cannot be claimed for damages/destroys cause by:

- forced mechanical damage, crash of the model etc.
- chemical substances
- unqualified manipulation, incorrect installation
- any interference with the controller (soldering, change of wires, change components, exposed circuit board etc.)
- reversal of poles
- disconnecting from the battery (or switch-off) while the motor is still turning
- overloading with a higher number of cells than specified
- feeding from unspecified source (e.g. mains source instead of the specified cells)
- shortcut on the output
- overload
- overloading BEC, shortcut BEC or servocable to feeding or motor cables
- water or any other substances (except "WR" version for water)
- salt water
- running with damaged motor
- operations with not recommended (not suitable) connectors
- not following the instruction in the manual or operating in conflict with recommendations or manual

The warranty also does not apply when:

- the connectors are cut (servocable etc.)
- the controller or its parts are warn by regular use
- the plastic cover (shrinking sleeve) is cut or the controller is taken out of it
- acts of God (e.g. strike by lightening)

We do reserve the right to change our product warranty at any time without prior notice.

Service and Technical Support

Send product for service to address: **MGM COMPRO, Sv. Čecha 593, 760 01 Zlín, Czech republic, EU**

Call your questions and requests to: **+420 577 001 350** or write on: mgm@mgm-compro.cz .

Information about products, technical notes, news, recommendation: www.mgm-compro.cz

Update firmware and SW on: www.mgm-compro.cz

Recycling

This symbol on the product and / or accompanying documents mean that used electrical and electronic products should not be mixed with general household waste.
For proper treatment, recovery and recycling, please take these products to designated collection points, where they will be accepted on a free of charge basis.

Electromagnetic Conformity declaration

For these products of the HBC-series family we confirm that the electromagnetic compatibility directives are met.